
Brushless dc motors


Brush dc motors


Disc magnet motors


Can stack motors


Can stack linear actuators


Gearheads


Encoders

# Portescap
## Product Catalog


1 2 3
4 5 6
7 8 9 0



## Table of Contents

# Welcome to Portescap

Portescap is the innovation leader in miniature motors and precision motion control technologies for performance-critical applications that save, improve and enhance lives. We have continually advanced the state of the art for power, precision and efficiency in miniature motion. Driven by our passion for innovation, technical excellence and quality service, we deliver best-in-class products and custom engineering services to ensure a perfect fit for your applications.

## Power, Precision, Efficiency

**Brushless DC Motors**
Optimum speed, torque, life and precision

**Brush DC Motors**
Outstanding efficiency, power density and acceleration

**Disc Magnet Motors**
Dynamic performance with fine-step resolution

**Can Stack Motors**
Accuracy for cost-effective open-loop control

**Can Stack Linear Actuators**
Direct linear motion, high force in a small package

**Gearheads & Encoders**
Spur and planetary gearheads, optical and magneto-resistive encoders


## For Performance-Critical Applications

### Medical devices & clinical diagnostics
Motion components for drills, insulin pumps, infusion pumps, ventilators, arthroscopic shavers, surgical drills and saws, surgical robots, dental handpieces, electronic pipettes, laboratory analyzers and other devices. Autoclavable capability also available.

### Instrumentation
Miniature rotary and linear technologies for gas detectors, dispensing systems, microscopes, surveying total stations and other instruments.

### Security
Precise, energy-efficient miniature motion for electronic access systems and surveillance camera positioning.

### Aerospace
Light, rugged, powerful motion control for activating seats, window shades, valves, fuel meters, instrumentation, fins, tracking systems and more.

### Automation
Torque, acceleration, efficiency and durability for automated processes such as material handling, conveyors, pick-and-place systems, guide mechanisms and scanners.

### Other
Hand tools, HVAC&R, stage lighting, packaging machines, ATMs, telecom equipment, printers, humanoid robotics, industrial pumps, textile machinery, tattoo machines and more – any application that requires precise, powerful miniature motion.

## Choose the Right Technology for Your Application

| | Brushless DC Slotted | Brushless DC Slotless | Brush DC | Disc Magnet | Can Stack | Can Stack Linear Actuator |
|---|---|---|---|---|---|---|
| Efficiency/battery life | ++ | +++ | ++++ | + | + | + |
| Motor lifetime | ++++ | ++++ | ++ | ++++ | +++ | ++ |
| Autoclavability | ++++ | | + | | | |
| Ability to withstand harsh environments | ++++ | +++ | ++ | ++ | + | + |
| High power/weight ratio | ++++ | ++++ | +++ | +++ | + | + |
| High motor acceleration | ++ | ++ | +++ | ++++ | | |
| Open loop positioning | + | + | | ++++ | ++ | +++ |
| Simple control | + | + | ++++ | ++ | ++ | ++ |
| Low noise | +++ | ++++ | +++ | ++ | ++ | + |
| Ease of achieving linear motion | | | | | | ++++ |
| Max rated continuous torque | ++++ | ++++ | +++ | ++++ | + | |
| Max speed | ++++ | ++++ | +++ | ++ | + | + |

## The Miniature Motion Leader

**Continuous innovation** to create the highest precision and performance in miniature motion applications.

**The widest range** of miniature motion technologies to suit virtually any configuration, environment and envelope.

**Application-specific customization** and rapid prototyping, with research and development teams in strategic locations around the world.

**Collaboration** to understand your motion control needs and devise a smart, perfect-fit way to do the job better.

**A commitment to service and support** throughout your application's lifecycle, worldwide.

# Brushless dc motors

Brush dc motors

Disc magnet motors

Can stack motors

Can stack linear actuators

Gearheads

Encoders

# Brushless DC Motors

Built for precision, efficiency and reliability, these motors offer the power density needed to deliver top performance in the most compact applications. Available in slotted and slotless designs, they provide exceptional acceleration, speed, torque and position control over a long, trouble-free life.

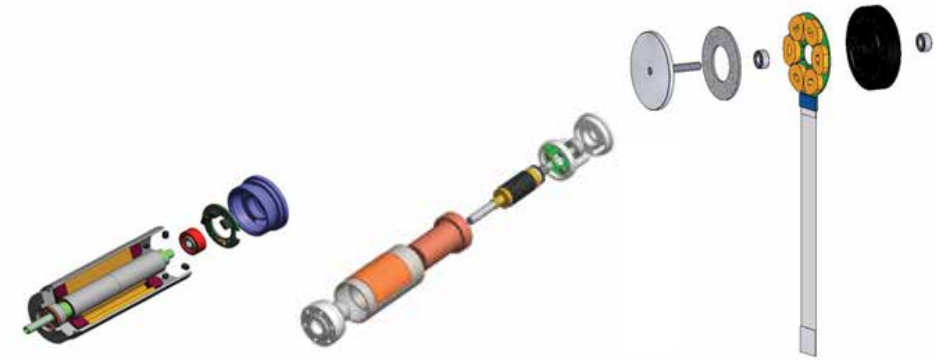

Brushless DC Slotted Motor  Brushless DC Slotless Motor  Brushless Flat Motor

## Exceptionally Efficient, Powerful and Durable

| Feature | Details | Application Advantages |
|---|---|---|
| **Slotless or slotted configurations** | • Slotless: self-supporting cylindrical coil | • Zero detent torque<br>• Reduced iron losses<br>• High efficiency<br>• Linear torque vs. speed |
| | • Slotted: coils inserted in the slots of the stator | • Excellent torque-to-power ratio<br>• High current capability<br>• Withstands rugged environments<br>• Autoclavable option |
| **Permanent magnet** | • Linear torque/speed curve (except iron losses)<br>• Torque proportional to current<br>• Speed proportional to voltage | • Ease of position and speed control |
| **Brushless design** | • Electronic commutation<br>• No brushes to wear or spark | • Long life, limited only by ball bearing wear<br>• Reliable in harsh and dusty environments<br>• Reduced EMI<br>• Quiet operation |
| **Winding attached to stator** | • Improved heat dissipation via conduction | • Superior overload capacity |
| **Autoclavable versions for slotted motors** | • Motor design optimized to withstand exposure to harsh environments including high temperature and pressure cycling | • Long life in medical devices that undergo frequent sterilization |

## For a Wide Range of Miniature Motion Needs

### Medical devices & clinical diagnostics
- Arthroscopic shavers
- Respiratory and ventilation devices
- Miniature pumps
- Laboratory automation
- Powered ENT instruments
- Surgical robots
- Diagnostic analyzers
- Medical analyzers
- Sample prep workstations
- Powered orthopedic drills and saws
- Powered surgical screwdrivers

### Aerospace
- Surveillance camera systems
- Seat actuation
- Valve actuation

### Instrumentation
- Dosing & dispensing systems
- Gas detection
- Explosive trace detection systems

### Other
- Nailers & framing systems
- Powered industrial fasteners
- Powered assembly screwdrivers
- Powered professional pruners

## Meet your Application's Working Point Requirements

**Brushless Slotless**

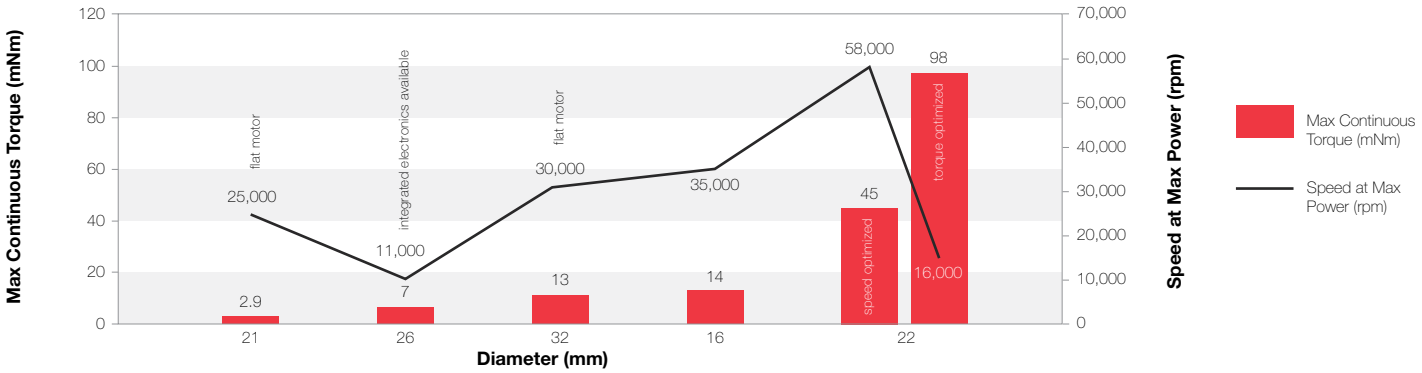


**Brushless Slotted**

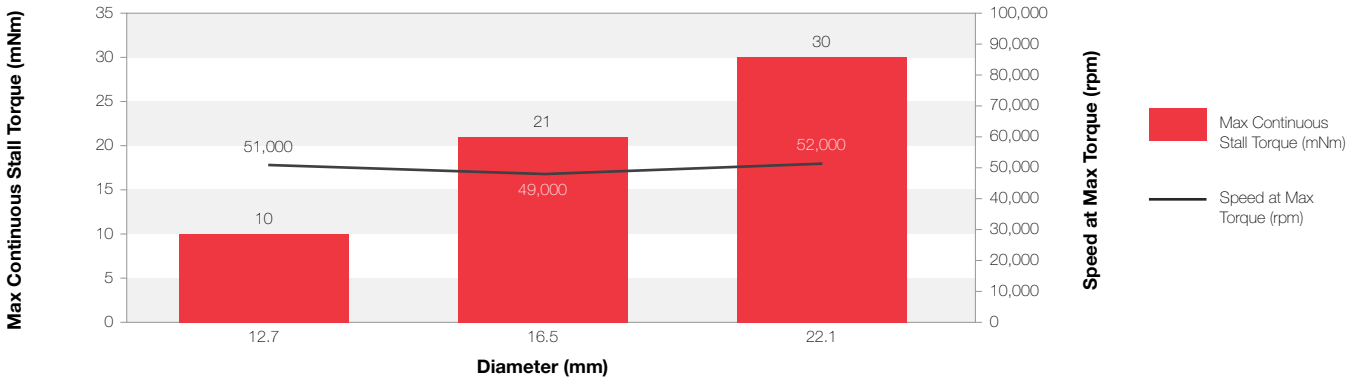


For complete product and application details, visit **portescap.com/brushless**

# Brushless DC Motor Technologies

This glossary of terms provides more information about the technology specifications listed in the Portescap Catalog for brushless DC motors.

## Electrical Data

| | |
|---|---|
| **1. Nominal voltage** | This voltage is used when measuring no-load speed, no-load current and other parameters. It does not represent a recommended voltage or a limitation of the motor. |
| **2. Optimization direction** | Brushless motors equipped with Hall sensors can be tuned so that the sensor positions compensate for the electrical and electronic time response of the commutation sequence. This is especially important for reducing motor losses in high-speed applications.<br>All the standard motors shown in this catalog are either symmetrical or optimized in the counterclockwise (CCW) direction as seen from the output shaft side of the motor. For optimized motors, optimization speed is mentioned in the specification document. Optimization speed and direction can be customized by request. |
| **3. No-load speed** | This is the motor speed as measured without any attachment or friction on the output shaft, with the driver being supplied by the nominal voltage. |
| **4. Typical no-load current** | This is the average current measured before the driver power stage, without any attachment or friction on the output shaft and with the driver being supplied by the nominal voltage. This parameter can vary significantly depending on the driver used and the motor temperature. All data are measured using the Hall-sensored version of the commutation, when available, after 30 seconds of running the motor at room temperature. |
| **5. Max continuous mechanical power (@ 25°C)** | Within maximum continuous operation specifications (see power curve graph), and with proper selection of speed and torque, this is the highest mechanical power output that can typically be achieved without exceeding the thermal limitation of the motor windings. In some cases, this maximum power can also be limited by the maximum recommended motor speed for the bearing assembly. Maximum continuous power is calculated with the motor in the air at 25°C, with no heat sink or forced air cooling. With improved cooling, it may be possible to exceed this value in short-term operation. |
| **6. Max continuous current** | Within maximum continuous operation specifications (see power curve graph), this is the current drawn at the highest output torque the motor can continuously achieve without exceeding the thermal limitations of the windings. Maximum continuous current is usually reached at a very low speed where iron and friction losses are minimal. This value is calculated with the motor in the air at 25°C, with no heat sink or forced air cooling. With improved cooling, it may be possible to exceed this value in short-term operation. This value does not apply to the very short peak current at startup, which can typically reach several tens of amps. |
| **7. Max continuous torque** | This is the torque corresponding to the maximum continuous current, usually reached at very low speed. Stall torque, when the motor needs to start from a blocked position, may be lower than this figure due to motor torque ripple. |

| | |
|---|---|
| **8. Back EMF constant** | Back EMF is a voltage generated by the windings of a permanent magnet motor in rotation. Because this voltage increases with speed and is applied in the opposite direction from the input voltage, the back EMF constant can be used to calculate the motor's speed at any given input voltage, assuming no friction and no loading torque.<br>The specification document also gives the 0-peak value of the back EMF, which is typically higher than the average value and can be measured on motor phases with an oscilloscope while the motor is back-driven. |
| **9. Torque constant** | This value relates the current in the motor phases to the torque created at the rotor level. |
| **10. Motor regulation $R/k^2$** | This value gives the extra joule losses in the motor winding, in watts, multiplied by the torque squared ($Nm^2$). A lower number indicates a better magnetic design for dealing with high torques. The calculation is based on internal phase resistance, not including wire soldering and connector resistance. |
| **11. Motor regulation $k/R^{1/2}$** | This is simply another way of expressing the previous property. In this case, a higher number indicates a more efficient magnetic design for dealing with high torques. |
| **12. Internal resistance - phase to phase** | This is the coil phase resistance measured at room temperature before the coil is soldered to the motor circuit assembly. |
| **13. Line to line resistance at connectors** | This is the phase resistance measured for the completed motor at room temperature. It includes solder, wire and (if present) connector resistances. In motors with very low resistance, the line to line resistance may differ significantly from the internal resistance. |
| **14. Inductance - phase to phase** | This is the motor phase inductance measured with an inductance meter at 1000 Hz. |
| **15. Mechanical time constant** | This represents the motor's ability to accelerate quickly at a given voltage and without any current limitation. It typically represents the time needed to reach 63.2% of the motor's final speed under a constant voltage. |
| **16. Electrical time constant** | This is the time constant L/R (inductance divided by resistance) that is needed to properly size the driver PWM frequency. It represents the motor's ability to let the current vary quickly. This value is commonly very low in slotless BLDC motors. |

## General Data

| | |
|---|---|
| **17. Maximum motor speed** | This is the maximum recommended speed as limited by the bearing assembly type, taking into account the bearing supplier's specification, vibration behavior and other factors. |
| **18. Ambient working temperature range** | The recommended ambient working temperature range is based on the properties of the bearing lubricant. |
| **19. Ambient storage temperature range** | The recommended ambient storage temperature range is based on the properties of the bearing lubricant. |
| **20. Ball bearings preload** | This is the bearing preload force as implemented by design. This might be a static preload in bearings bonded to the shaft after assembly. In that case, it is not possible to measure preload force by applying an external force on the shaft, and there is vey little axial play. To maximize bearing life, we recommend that forces on the shaft during operation do not exceed the preload force. |
| **21. Axial static force without shaft support (max)** | When press-fitting a part onto the shaft without providing support on the opposite end of the shaft, the applied force is supported entirely by the bearing races. This is the maximum pressing force recommended to avoid damage to the bearings. |
| **22. Maximum winding temperature** | This specification is linked to the properties of the thermo-bonding material around the coil copper wires. The maximum winding temperature can be an important consideration for applications that require long product life because operation at high temperatures can lead to failure modes such as fast aging of the bearing lubricant. |
| **23. Thermal resistance** | Thermal resistance is given either directly from the coil to the ambient air surrounding the motor, or in two steps: from coil to housing and then from housing to ambient.<br>This value is calculated with the motor in the air at 25°C, with no heat sink or forced air cooling. With the motor installed, the value is likely to decrease in many applications, but it could also be higher if the motor is surrounded by a small volume of air that cannot cool down.<br>Thermal resistance varies with air convection parameters, and is lower at a high temperature of the motor housing. The value can also vary based on speed, especially with flat motors.<br>This value is measured during operation close to the maximum continuous power zone (see power curve graph). |
| **24. Thermal time constant** | This value is given directly from the coil to the ambient air surrounding the motor. Along with the thermal resistance, the thermal time constant allows for solving thermal differential equations for the motor. It is measured at a constant voltage supply over time, which means the amount of power loss that can be dissipated tends to decrease due to the increase in winding resistance with increasing temperature. |
| **25. Mass** | This is the total motor mass, including cables. |
| **26. Rotor inertia** | This assumes an unconnected rotor and is used to determine angular acceleration for a given torque. |
| **27. Hall sensor electrical phasing** | In a three-phase BLDC motor with Hall sensors, the sensors are commonly phased at 120° electrically from each other. (See the chart to the right for an example.) This affects driver selection. |

# Additional Information

| | |
|---|---|
| **28. Balancing** | All cylinder motors in this section have their rotors dynamically balanced on two planes through a material removal process. |
| **29. Hall sensors** | An external pull-up resistor is required on drive electronics. |
| **30. Power curve** | The typical power curve shows the continuous operation working points possible (the colored part of the chart). This is based on purely thermal limitations (the same limitations described under "Max continuous current") that change depending on the cooling conditions of the application – for example, when the motor is mounted to a metal part.<br>These power curves are common to all coils presented, and they represent typical motor performance with the understanding that many parameters influencing the curves have tolerances around nominal values (no-load current, resistance, torque constant, etc.). These power curves are not plotted at nominal voltage; each working point illustrated will require matching of coil, voltage and load to reach the indicated speed.<br>Dotted lines show the torque/speed relationships that deliver a given mechanical power value (in watts) at the motor shaft.<br>Working points outside of the illustrated continuous operation range are possible depending on the duty cycle.<br>In some cases, the power curve stops early on the high-speed side before the limitation is reached (the flat portion on top of the curve) because measurement was not possible at higher speeds.<br>In some cases, the maximum recommended motor speed is lower than the maximum continuous thermal limit shown on the power curve. This recommendation is based on characteristics of the bearing assembly. |
| **31. Dielectric test** | A dielectric test (also known as hipot or high potential test) is performed on all motors under 500V phases to the housing and during 5 seconds after voltage ramp up. Maximum allowed leakage is 1mA. |

# Motor signal sequence shaft rotation CW seen from front face for BH and EC series of slotless BLDC motors, or CCW for BF series

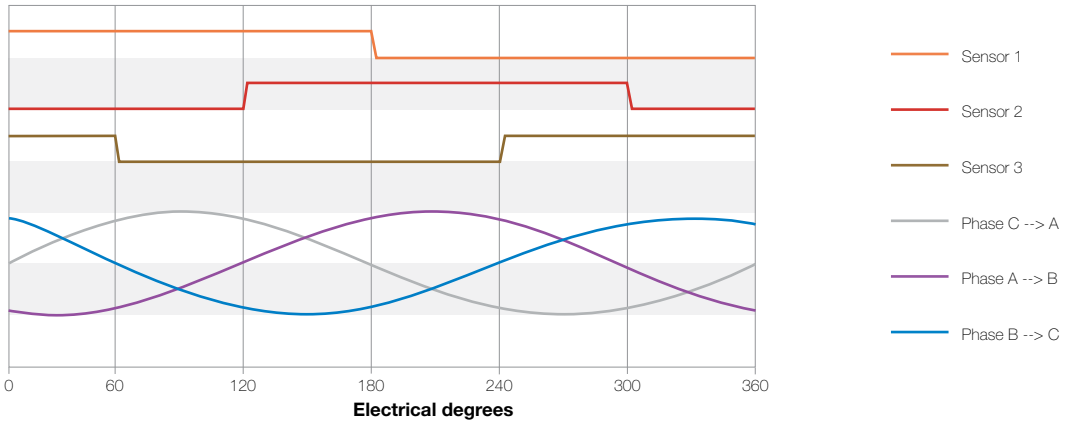

## 16ECP36 Ultra EC™ 2 pole Ø16mm 27 W

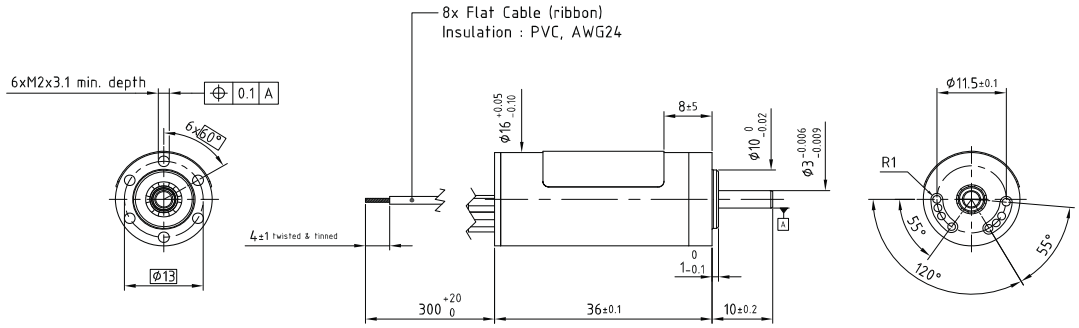


Dimensions in mm

### 16ECP36 - 8B - **

| Electrical Data | ** | 380 | 245 | 108 | 49 | |
|---|---|---|---|---|---|---|
| 1 Nominal Voltage | $U_N$ | 24 | 24 | 24 | 12 | Volt |
| 2 Optimization Direction | - | Symetrical | Symetrical | Symetrical | Symetrical | - |
| 3 No-Load Speed | $n_0$ | 8,100 | 12,420 | 29,000 | 31,550 | rpm |
| 4 Typical No-Load Current | $I_0$ | 20 | 35 | 85 | 160 | mA |
| 5 Max Continuous Mechanical Power (@25°C) | $P_{max}$ | 27.5 | 27.5 | 27.5 | 27.5 | W |
| 6 Max Continuous Current | $I_{e\,max}$ | 0.3 | 0.4 | 0.9 | 2.1 | A |
| 7 Max Continuous Torque | $M_{e\,max}$ | 7.0 (1) | 7.2 (1.02) | 7.1 (1.01) | 7.5 (1.07) | mNm (oz-in) |
| 8 Back EMF Constant | $K_E$ | 2.82 | 1.84 | 0.80 | 0.37 | V/1000 rpm |
| 9 Torque Constant | $k_M$ | 26.9 | 17.6 | 7.7 | 3.5 | mNm/A |
| 10 Motor Regulation | $R/k^2$ | 71.8 | 67.9 | 69.2 | 62.4 | $10^3$/Nms |
| 11 Motor Regulation | $k/R^{½}$ | 3.7 (0.53) | 3.8 (0.54) | 3.8 (0.54) | 4 (0.57) | mNm/W$^{½}$ (oz-in/W$^{½}$) |
| 12 Internal Resistance - phase to phase | $R_l$ | 52.00 | 21.00 | 4.05 | 0.78 | ohms |
| 13 Line to Line Resistance at Connectors | $R_L$ | 52.10 | 21.10 | 4.13 | 0.82 | ohms |
| 14 Inductance Phase to Phase | L | 3.93 | 1.63 | 0.32 | 0.07 | mH |
| 15 Mechanical Time Constant | $t_m$ | 3.9 | 3.7 | 3.8 | 3.4 | ms |
| 16 Electrical Time Constant | $t_e$ | 0.08 | 0.08 | 0.08 | 0.08 | ms |

| General Data | | | |
|---|---|---|---|
| 17 Maximum Motor Speed | $n_{max}$ | 63,000 | rpm |
| 18 Ambient Working Temperature Range | - | -30 to + 100 (-22 to + 212) | °C (°F) |
| 19 Ambient Storage Temperature Range | - | -40 to + 100 (-40 to + 212) | °C (°F) |
| 20 Ball Bearings Preload | - | 5.3 | N |
| 21 Axial Static Force w/o Shaft Support (max) | - | 34 | N |
| 22 Maximum Winding Temperature | - | 125 (257) | °C (°F) |
| 23 Thermal Resistance | $R_{th1}/R_{th2}$ | 3.5 / 17 | °C/W |
| 24 Thermal Time Constant | $t_w$ | 580 | s |
| 25 Weight | - | 41 (1.45) | g (oz) |
| 26 Rotor Inertia | J | 0.60 | g.cm$^2$ |
| 27 Hall Sensor Electrical Phasing | - | 120 | Electrical ° |

* Available without hall sensor

| with hall effect sensors | |
|---|---|
| **Wire** | **Description** |
| Grey | Phase 1 |
| Violet | Phase 2 |
| Blue | Phase 3 |
| Green | 3 to 24V DC |
| Yellow | GND |
| Orange | Sensor 1 |
| Red | Sensor 2 |
| Brown | Sensor 3 |

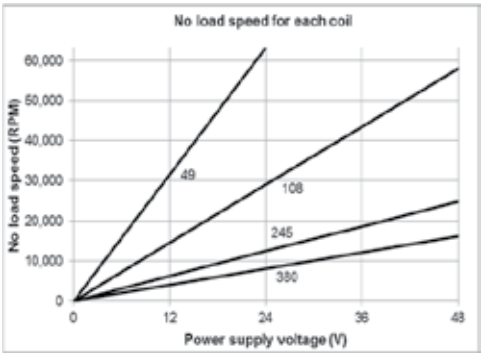


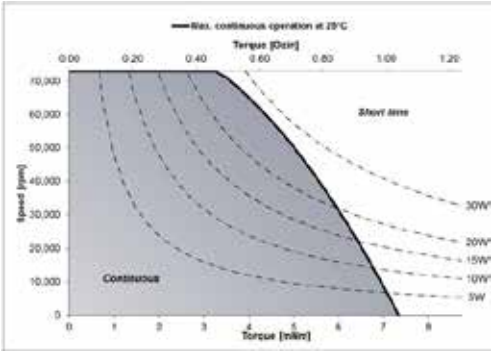


V121616

## 16ECP52 Ultra EC™ 2 pole Ø16mm 37 W

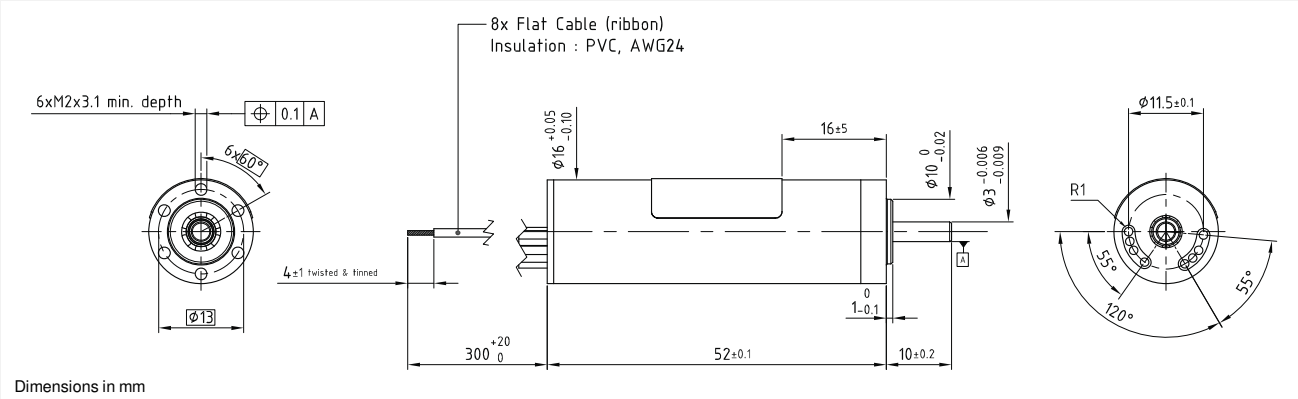


### 16ECP52 - 8B - **

| Electrical Data | ** | 220 | 112 | 49 | |
|---|---|---|---|---|---|
| 1 Nominal Voltage | $U_N$ | 24 | 24 | 24 | Volt |
| 2 Optimization Direction | - | Symetrical | Symetrical | Symetrical | - |
| 3 No-Load Speed | $n_0$ | 6,144 | 12,100 | 27,800 | rpm |
| 4 Typical No-Load Current | $I_0$ | 19 | 41 | 134 | mA |
| 5 Max Continuous Mechanical Power (@25°C) | $P_{max}$ | 37.5 | 37.5 | 37.5 | W |
| 6 Max Continuous Current | $I_{e\,max}$ | 0.4 | 0.8 | 2.0 | A |
| 7 Max Continuous Torque | $M_{e\,max}$ | 14.5 (2.06) | 14.7 (2.09) | 16.1 (2.28) | mNm (oz-in) |
| 8 Back EMF Constant | $K_E$ | 3.77 | 1.93 | 0.84 | V/1000 rpm |
| 9 Torque Constant | $k_M$ | 36.0 | 18.4 | 8.0 | mNm/A |
| 10 Motor Regulation | $R/k^2$ | 18.9 | 18.3 | 15.4 | $10^3$/Nms |
| 11 Motor Regulation | $k/R^{½}$ | 7.3 (1.04) | 7.4 (1.05) | 8.1 (1.15) | mNm/$W^{½}$ (oz-in/$W^{½}$) |
| 12 Internal Resistance - phase to phase | $R_l$ | 24.50 | 6.20 | 0.98 | ohms |
| 13 Line to Line Resistance at Connectors | $R_L$ | 24.60 | 6.30 | 1.06 | ohms |
| 14 Inductance Phase to Phase | L | 2.32 | 0.60 | 0.12 | mH |
| 15 Mechanical Time Constant | $t_m$ | 1.9 | 1.8 | 1.5 | ms |
| 16 Electrical Time Constant | $t_e$ | 0.10 | 0.10 | 0.12 | ms |

| General Data | | | |
|---|---|---|---|
| 17 Maximum Motor Speed | $n_{max}$ | 40,000 | rpm |
| 18 Ambient Working Temperature Range | - | -30 to + 100 (-22 to + 212) | °C (°F) |
| 19 Ambient Storage Temperature Range | - | -40 to + 100 (-40 to + 212) | °C (°F) |
| 20 Ball Bearings Preload | - | 5.3 | N |
| 21 Axial Static Force w/o Shaft Support (max) | - | 34 | N |
| 22 Maximum Winding Temperature | - | 125 (257) | °C (°F) |
| 23 Thermal Resistance | $R_{th1}/R_{th2}$ | 3 / 15 | °C/W |
| 24 Thermal Time Constant | $t_w$ | 750 | s |
| 25 Weight | - | 62 (2.19) | g (oz) |
| 26 Rotor Inertia | J | 1 | $g.cm^2$ |
| 27 Hall Sensor Electrical Phasing | - | 120 | Electrical ° |

* Available without hall sensor

| with hall effect sensors | |
|---|---|
| **Wire** | **Description** |
| Grey | Phase 1 |
| Violet | Phase 2 |
| Blue | Phase 3 |
| Green | 3 to 24V DC |
| Yellow | GND |
| Orange | Sensor 1 |
| Red | Sensor 2 |
| Brown | Sensor 3 |

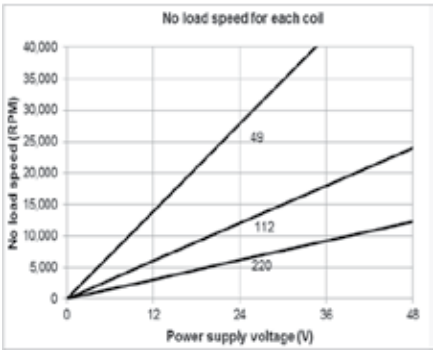


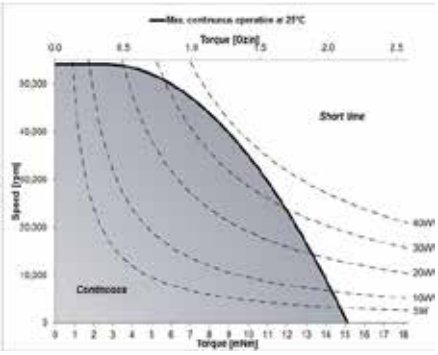


V121616

## 16BHS 2-wires 2 pole Ø16mm 6 W

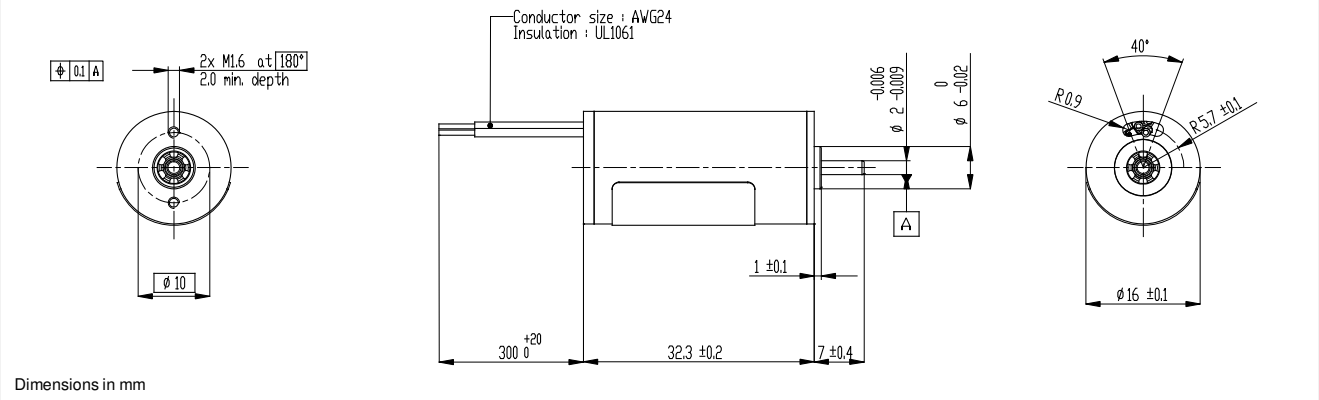


Dimensions in mm

### 16BHS 2A - **

| Electrical Data | ** | E | L | P | T | |
|---|---|---|---|---|---|---|
| 1 Nominal Voltage | $U_N$ | 12 | 12 | 12 | 12 | Volt |
| 2 Optimization Direction | - | n.a. | n.a. | n.a. | n.a. | - |
| 3 No-Load Speed | $n_0$ | 8,740 | 12,740 | 17,100 | 33,770 | rpm |
| 4 Typical No-Load Current | $I_0$ | 55.0 | 75.0 | 112.0 | 235.0 | mA |
| 5 Max Continuous Mechanical Power (@25°C) | $P_{max}$ | 6.0 | 6.0 | 6.0 | 6.0 | W |
| 6 Max Continuous Current | $I_{e\,max}$ | 0.3 | 0.4 | 0.6 | 1.2 | A |
| 7 Max Continuous Torque | $M_{e\,max}$ | 3.8 (0.54) | 3.6 (0.51) | 4 (0.57) | 4 (0.57) | mNm (oz-in) |
| 8 Back EMF Constant | $K_E$ | 1.19 | 0.84 | 0.65 | 0.34 | V/1000 rpm |
| 9 Torque Constant | $k_M$ | 11.4 | 8.1 | 6.2 | 3.3 | mNm/A |
| 10 Motor Regulation | $R/k^2$ | 225.5 | 251.5 | 205.5 | 192.8 | $10^3$/Nms |
| 11 Motor Regulation | $k/R^{½}$ | 2.1 (0.3) | 2 (0.29) | 2.2 (0.32) | 2.2 (0.32) | mNm/W$^{½}$ (oz-in/W$^{½}$) |
| 12 Internal Resistance - phase to phase | $R_I$ | 29.30 | 16.50 | 7.90 | 2.10 | ohms |
| 13 Line to Line Resistance at Connectors | $R_L$ | n.a. | n.a. | n.a. | n.a. | ohms |
| 14 Inductance Phase to Phase | L | 1.17 | 0.66 | 0.32 | 0.08 | mH |
| 15 Mechanical Time Constant | $t_m$ | 11.8 | 13.2 | 10.7 | 10.3 | ms |
| 16 Electrical Time Constant | $t_e$ | 0.04 | 0.04 | 0.04 | 0.04 | ms |

| General Data | | | |
|---|---|---|---|
| 17 Maximum Motor Speed | $n_{max}$ | 10,900 | rpm |
| 18 Ambient Working Temperature Range | - | -30 to + 80 (-22 to + 176) | °C (°F) |
| 19 Ambient Storage Temperature Range | - | -40 to + 80 (-40 to + 176) | °C (°F) |
| 20 Ball Bearings Preload | - | 2.0 | N |
| 21 Axial Static Force w/o Shaft Support (max) | - | 25.0 | N |
| 22 Maximum Winding Temperature | - | 125 (257) | °C (°F) |
| 23 Thermal Resistance | $R_{th}$ | 22.0 | °C/W |
| 24 Thermal Time Constant | $t_w$ | 520 | s |
| 25 Weight | - | 33 (1.17) | g (oz) |
| 26 Rotor Inertia | J | 0.500 | g.cm$^2$ |
| 27 Hall Sensor Electrical Phasing | - | NA | Electrical ° |

| integrated electronics | |
|---|---|
| **Wire** | **Description** |
| Red | VCC |
| Black | GND |
| Other | 3.5-15V DC for E,L,P windings<br>3.5-5V DC for T winding<br>2.6A max - care about polarity |
| Other | Choose CW or CCW for rotation direction seen from shaft output side |

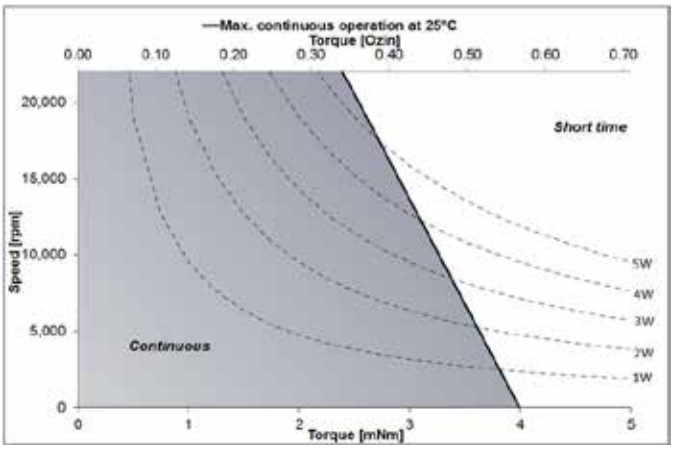


V121616

## 22ECP45 Ultra EC™ 2 pole Ø22mm 80W

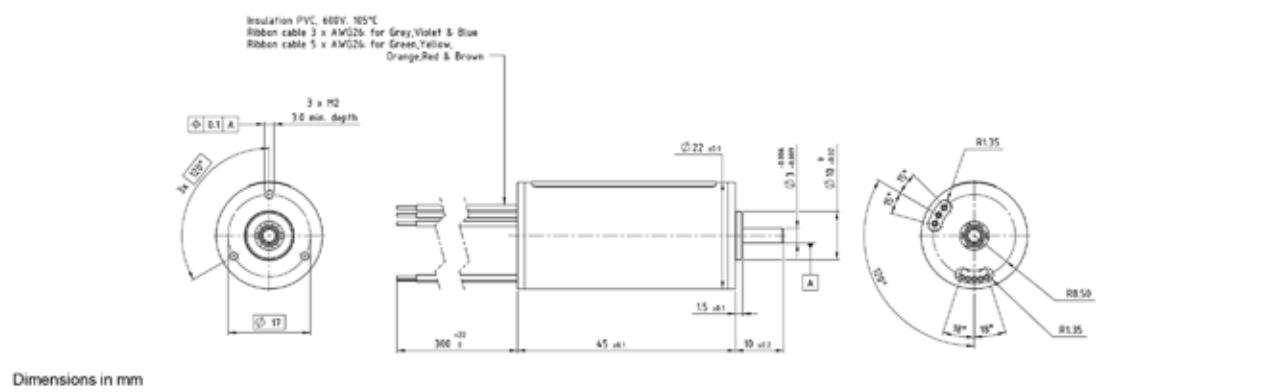


Dimensions in mm

### 22ECP45 8B - **

| Electrical Data | ** | 154 | 82 | |
|---|---|---|---|---|
| 1 Nominal Voltage | $U_N$ | 24 | 24 | Volt |
| 2 Optimization Direction | - | Symetrical | Symetrical | - |
| 3 No-Load Speed | $n_0$ | 8,370 | 15,700 | rpm |
| 4 Typical No-Load Current | $I_0$ | 25 | 60 | mA |
| 5 Max Continuous Mechanical Power (@25°C) | $P_{max}$ | 80 | 80 | W |
| 6 Max Continuous Current | $I_{e\,max}$ | 1.0 | 2.0 | A |
| 7 Max Continuous Torque | $M_{e\,max}$ | 27.7 (3.93) | 29.4 (4.17) | mNm (oz-in) |
| 8 Back EMF Constant | $K_E$ | 2.82 | 1.53 | V/1000 rpm |
| 9 Torque Constant | $k_M$ | 27.0 | 14.6 | mNm/A |
| 10 Motor Regulation | $R/k^2$ | 8.0 | 7.0 | $10^3$/Nms |
| 11 Motor Regulation | $k/R^{½}$ | 11.2 (1.59) | 11.9 (1.69) | $mNm/W^{½}$ ($oz\text{-}in/W^{½}$) |
| 12 Internal Resistance - phase to phase | $R_I$ | 5.80 | 1.50 | ohms |
| 13 Line to Line Resistance at Connectors | $R_L$ | 5.89 | 1.59 | ohms |
| 14 Inductance Phase to Phase | L | 0.94 | 0.27 | mH |
| 15 Mechanical Time Constant | $t_m$ | 1.8 | 1.6 | ms |
| 16 Electrical Time Constant | $t_e$ | 0.16 | 0.18 | ms |

| General Data | | | |
|---|---|---|---|
| 17 Maximum Motor Speed | $n_{max}$ | 47,000 | rpm |
| 18 Ambient Working Temperature Range | - | -30 to + 100 (-22 to + 212) | °C (°F) |
| 19 Ambient Storage Temperature Range | - | -40 to + 100 (-40 to + 212) | °C (°F) |
| 20 Ball Bearings Preload | - | 5.5 | N |
| 21 Axial Static Force w/o Shaft Support (max) | - | 34 | N |
| 22 Maximum Winding Temperature | - | 125 (257) | °C (°F) |
| 23 Thermal Resistance | $R_{th1}/R_{th2}$ | 2/9.7 | °C/W |
| 24 Thermal Time Constant | $t_w$ | 850 | s |
| 25 Weight | - | 100 (3.53) | g (oz) |
| 26 Rotor Inertia | J | 2.30 | $g.cm^2$ |
| 27 Hall Sensor Electrical Phasing | - | 120 | Electrical ° |

* Available without hall sensor

| with hall effect sensors | |
|---|---|
| Wire | Description |
| Grey | Phase 1 |
| Violet | Phase 2 |
| Blue | Phase 3 |
| Green | 3.5 to 27V DC |
| Yellow | GND |
| Orange | Sensor 1 |
| Red | Sensor 2 |
| Brown | Sensor 3 |

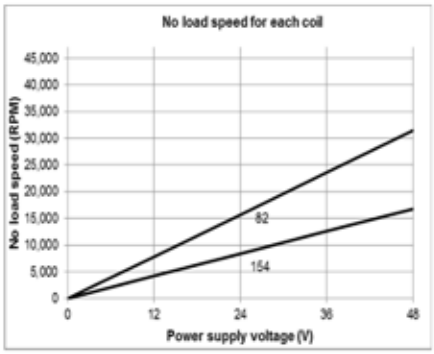


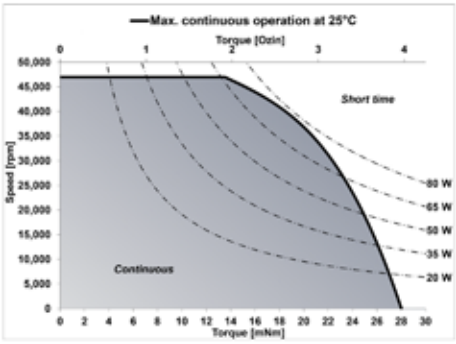

## 22ECP60 Ultra EC™ 2 pole Ø22mm 120W

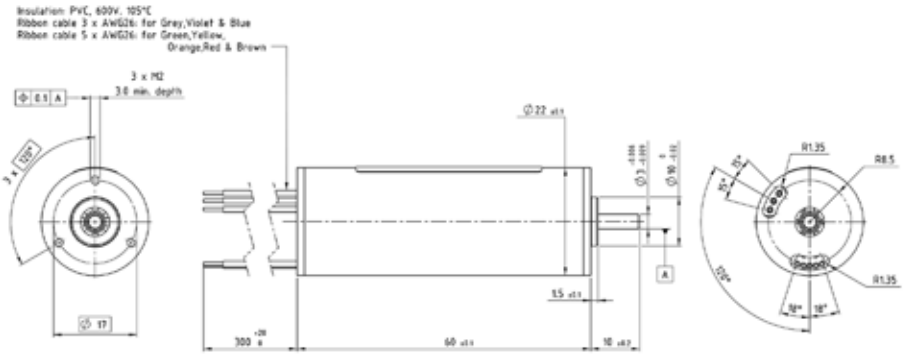


Dimensions in mm

### 22ECP60 8B - **

| Electrical Data | ** | 90 | |
|---|---|---|---|
| 1 Nominal Voltage | $U_N$ | 24 | Volt |
| 2 Optimization Direction | - | Symetrical | - |
| 3 No-Load Speed | $n_0$ | 8,050 | rpm |
| 4 Typical No-Load Current | $I_0$ | 40 | mA |
| 5 Max Continuous Mechanical Power (@25°C) | $P_{max}$ | 120 | W |
| 6 Max Continuous Current | $I_{e\,max}$ | 1.8 | A |
| 7 Max Continuous Torque | $M_{e\,max}$ | 50.5 (7.16) | mNm (oz-in) |
| 8 Back EMF Constant | $K_E$ | 2.96 | V/1000 rpm |
| 9 Torque Constant | $k_M$ | 28.3 | mNm/A |
| 10 Motor Regulation | $R/k^2$ | 3.0 | $10^3$/Nms |
| 11 Motor Regulation | $k/R^{½}$ | 18.3 (2.6) | mNm/W$^{½}$ (oz-in/W$^{½}$) |
| 12 Internal Resistance - phase to phase | $R_l$ | 2.38 | ohms |
| 13 Line to Line Resistance at Connectors | $R_L$ | 2.47 | ohms |
| 14 Inductance Phase to Phase | L | 0.48 | mH |
| 15 Mechanical Time Constant | $t_m$ | 1.0 | ms |
| 16 Electrical Time Constant | $t_e$ | 0.20 | ms |

| General Data | | | |
|---|---|---|---|
| 17 Maximum Motor Speed | $n_{max}$ | 38000 | rpm |
| 18 Ambient Working Temperature Range | - | -30 to + 100 (-22 to + 212) | °C (°F) |
| 19 Ambient Storage Temperature Range | - | -40 to + 100 (-40 to + 212) | °C (°F) |
| 20 Ball Bearings Preload | - | 5.50 | N |
| 21 Axial Static Force w/o Shaft Support (max) | - | 34 | N |
| 22 Maximum Winding Temperature | - | 125 (257) | °C (°F) |
| 23 Thermal Resistance | $R_{th1}/R_{th2}$ | 1/8.4 | °C/W |
| 24 Thermal Time Constant | $t_w$ | 1100 | s |
| 25 Weight | - | 140 (4.94) | g (oz) |
| 26 Rotor Inertia | J | 3.5 | g.cm$^2$ |
| 27 Hall Sensor Electrical Phasing | - | 120 | Electrical ° |

| with hall effect sensors | |
|---|---|
| Wire | Description |
| Grey | Phase 1 |
| Violet | Phase 2 |
| Blue | Phase 3 |
| Green | 3.5 to 27V DC |
| Yellow | GND |
| Orange | Sensor 1 |
| Red | Sensor 2 |
| Brown | Sensor 3 |

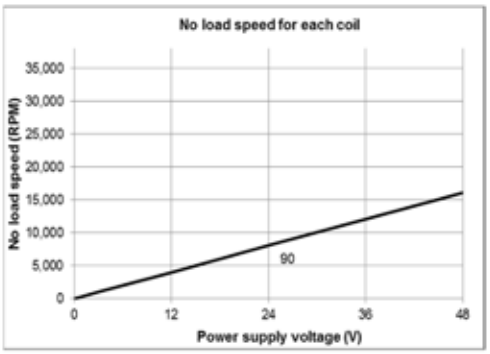


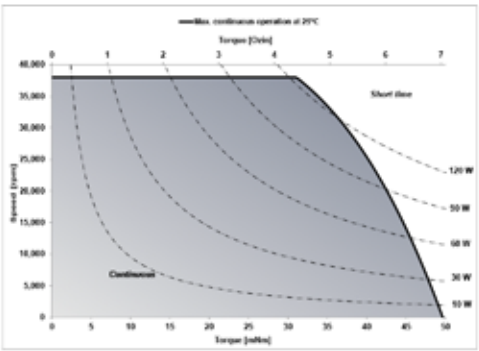


V121616

## 22ECS45 Ultra EC™ 2 pole Ø22mm 120 W

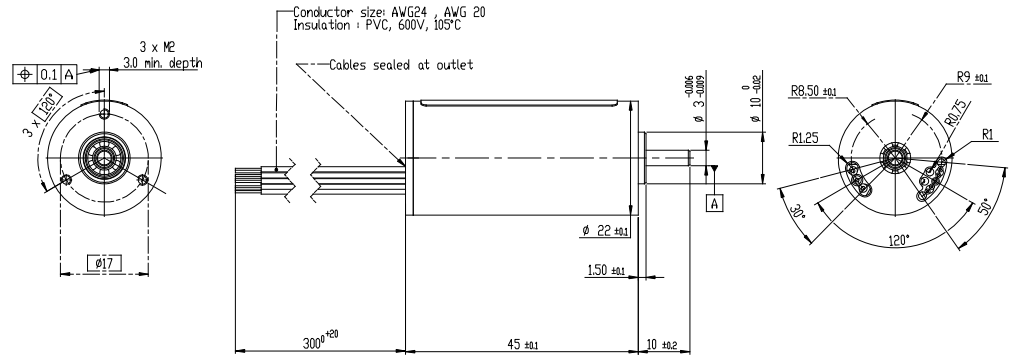


Dimensions in mm

### 22ECS45 10B - **

| Electrical Data | ** | 38 | 30 | 24 | 18 | |
|---|---|---|---|---|---|---|
| 1 Nominal Voltage | $U_N$ | 24 | 24 | 24 | 24 | Volt |
| 2 Optimization Direction | - | CCW | CCW | CCW | CCW | - |
| 3 No-Load Speed | $n_0$ | 34,500 | 43,500 | 51,600 | 68,500 | rpm |
| 4 Typical No-Load Current | $I_0$ | 160 | 195 | 240 | 300 | mA |
| 5 Max Continuous Mechanical Power (@25°C) | $P_{max}$ | 120 | 120 | 120 | 120 | W |
| 6 Max Continuous Current | $I_{e\,max}$ | 4.0 | 5.2 | 6.4 | 8.2 | A |
| 7 Max Continuous Torque | $M_{e\,max}$ | 26.6 (3.77) | 26.8 (3.8) | 26.7 (3.79) | 26.8 (3.8) | mNm (oz-in) |
| 8 Back EMF Constant | $K_E$ | 0.69 | 0.54 | 0.44 | 0.34 | V/1000 rpm |
| 9 Torque Constant | $k_M$ | 6.6 | 5.2 | 4.2 | 3.3 | mNm/A |
| 10 Motor Regulation | $R/k^2$ | 8.6 | 8.5 | 8.5 | 8.5 | $10^3$/Nms |
| 11 Motor Regulation | $k/R^{½}$ | 10.8 (1.53) | 10.8 (1.53) | 10.8 (1.53) | 10.8 (1.53) | mNm/W$^{½}$ (oz-in/W$^{½}$) |
| 12 Internal Resistance - phase to phase | $R_l$ | 0.38 | 0.23 | 0.15 | 0.09 | ohms |
| 13 Line to Line Resistance at Connectors | $R_L$ | 0.42 | 0.25 | 0.18 | 0.11 | ohms |
| 14 Inductance Phase to Phase | L | 0.057 | 0.035 | 0.022 | 0.013 | mH |
| 15 Mechanical Time Constant | $t_m$ | 1.9 | 1.9 | 1.9 | 1.9 | ms |
| 16 Electrical Time Constant | $t_e$ | 0.15 | 0.15 | 0.15 | 0.14 | ms |

| General Data | | | |
|---|---|---|---|
| 17 Maximum Motor Speed | $n_{max}$ | 73,000 | rpm |
| 18 Ambient Working Temperature Range | - | -30 to + 100 ( -22 to + 212) | °C (°F) |
| 19 Ambient Storage Temperature Range | - | -40 to + 100 ( -40 to + 212) | °C (°F) |
| 20 Ball Bearings Preload | - | 5.5 | N |
| 21 Axial Static Force w/o Shaft Support (max) | - | 34 | N |
| 22 Maximum Winding Temperature | - | 125 (257) | °C (°F) |
| 23 Thermal Resistance | $R_{th1}/R_{th2}$ | 2 / 9.7 | °C/W |
| 24 Thermal Time Constant | $t_w$ | 1,000 | s |
| 25 Weight | - | 100 (3.52) | g (oz) |
| 26 Rotor Inertia | J | 2.30 | g.cm$^2$ |
| 27 Hall Sensor Electrical Phasing | - | 120 | Electrical ° |

| with hall effect sensors | |
|---|---|
| **Wire** | **Description** |
| Grey | Phase 1 |
| Violet | Phase 2 |
| Blue | Phase 3 |
| Green | 3.5 to 27V DC |
| Yellow | GND |
| Orange | Sensor 1 |
| Red | Sensor 2 |
| Brown | Sensor 3 |
| Black | NTC 1 |
| White | NTC 2 |

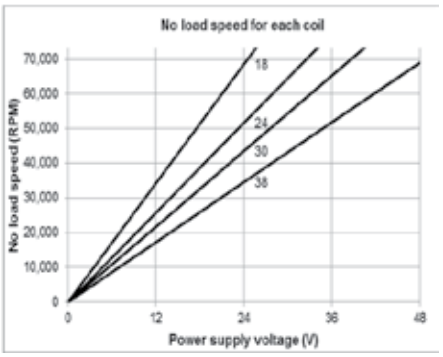


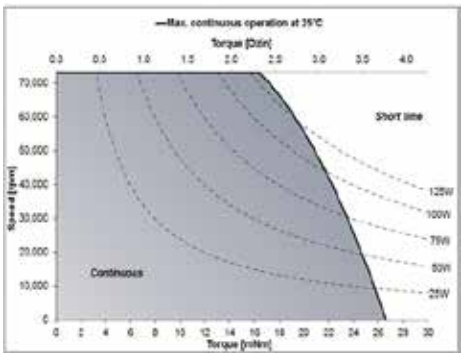


V121616

## 22ECS60 Ultra EC™ 2 pole Ø22mm 180 W

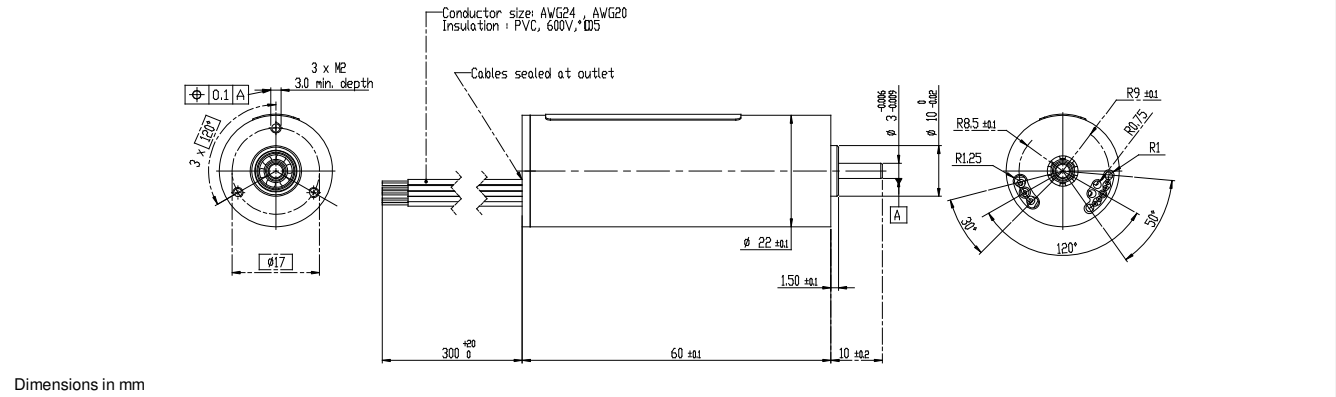


Dimensions in mm

### 22ECS60 10B - **

| Electrical Data | ** | 24 | 21 | 17 | 16 | |
|---|---|---|---|---|---|---|
| 1 Nominal Voltage | $U_N$ | 24 | 24 | 24 | 24 | Volt |
| 2 Optimization Direction | - | CCW | CCW | CCW | CCW | - |
| 3 No-Load Speed | $n_0$ | 32,000 | 35,000 | 43,000 | 47,000 | rpm |
| 4 Typical No-Load Current | $I_0$ | 120 | 150 | 190 | 210 | mA |
| 5 Max Continuous Mechanical Power (@25°C) | $P_{max}$ | 180 | 180 | 180 | 180 | W |
| 6 Max Continuous Current | $I_{e\,max}$ | 6.1 | 7.1 | 8.7 | 9.3 | A |
| 7 Max Continuous Torque | $M_{e\,max}$ | 44.1 (6.25) | 45.9 (6.5) | 44.5 (6.31) | 45 (6.38) | mNm (oz-in) |
| 8 Back EMF Constant | $K_E$ | 0.76 | 0.68 | 0.53 | 0.51 | V/1000 rpm |
| 9 Torque Constant | $k_M$ | 7.3 | 6.5 | 5.1 | 4.8 | mNm/A |
| 10 Motor Regulation | $R/k^2$ | 3.9 | 3.6 | 3.8 | 3.7 | $10^3$/Nms |
| 11 Motor Regulation | $k/R^{½}$ | 16 (2.27) | 16.7 (2.37) | 16.1 (2.28) | 16.3 (2.31) | mNm/W$^{½}$ (oz-in/W$^{½}$) |
| 12 Internal Resistance - phase to phase | $R_l$ | 0.21 | 0.15 | 0.10 | 0.09 | ohms |
| 13 Line to Line Resistance at Connectors | $R_L$ | 0.23 | 0.17 | 0.13 | 0.12 | ohms |
| 14 Inductance Phase to Phase | L | 0.034 | 0.026 | 0.017 | 0.015 | mH |
| 15 Mechanical Time Constant | $t_m$ | 1.4 | 1.3 | 1.3 | 1.3 | ms |
| 16 Electrical Time Constant | $t_e$ | 0.17 | 0.17 | 0.17 | 0.17 | ms |

| General Data | | | |
|---|---|---|---|
| 17 Maximum Motor Speed | $n_{max}$ | 60,000 | rpm |
| 18 Ambient Working Temperature Range | - | -30 to + 100 ( -22 to + 212) | °C (°F) |
| 19 Ambient Storage Temperature Range | - | -40 to + 100 ( -40 to + 212) | °C (°F) |
| 20 Ball Bearings Preload | - | 5.5 | N |
| 21 Axial Static Force w/o Shaft Support (max) | - | 34 | N |
| 22 Maximum Winding Temperature | - | 125 (257) | °C (°F) |
| 23 Thermal Resistance | $R_{th1}/R_{th2}$ | 1 / 8.4 | °C/W |
| 24 Thermal Time Constant | $t_w$ | 1,200 | s |
| 25 Weight | - | 140 (4.93) | g (oz) |
| 26 Rotor Inertia | J | 3.50 | g.cm$^2$ |
| 27 Hall Sensor Electrical Phasing | - | 120 | Electrical ° |

| with hall effect sensors | |
|---|---|
| **Wire** | **Description** |
| Grey | Phase 1 |
| Violet | Phase 2 |
| Blue | Phase 3 |
| Green | 3.5 to 27V DC |
| Yellow | GND |
| Orange | Sensor 1 |
| Red | Sensor 2 |
| Brown | Sensor 3 |
| Black | NTC 1 |
| White | NTC 2 |

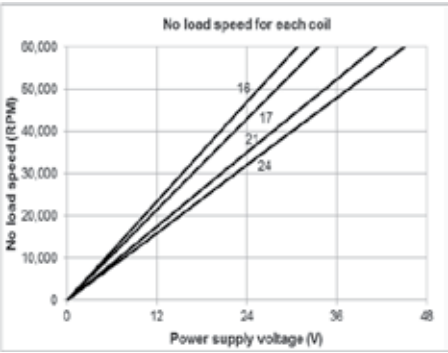


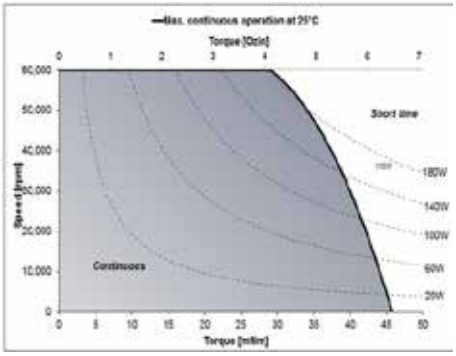


V121616

## 22ECT60 Ultra EC™ 4 pole Ø22mm 86W

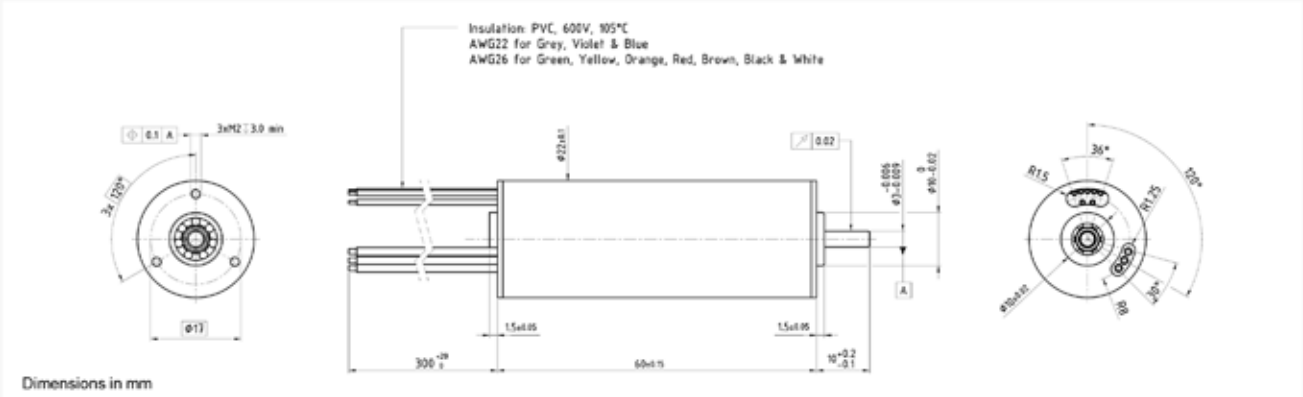


### 22ECT60 10B - **

| Electrical Data | ** | 9 | 15 | 21 | |
|---|---|---|---|---|---|
| 1 Nominal Voltage | $U_N$ | 24 | 24 | 24 | Volt |
| 2 Optimization Direction | - | Symmetrical | Symmetrical | Symmetrical | - |
| 3 No-Load Speed | $n_0$ | 20,370 | 12,350 | 9,180 | rpm |
| 4 Typical No-load Current | $I_0$ | 370 | 170 | 115 | mA |
| 5 Max Continuous Mechanical Power (@25°C) | $P_{max}$ | 86 | 86 | 86 | W |
| 6 Max Continuous Current | $I_{e\,max}$ | 5.9 | 3.6 | 2.6 | A |
| 7 Max Continuous Torque | $M_{e\,max}$ | 65.9 (9.34) | 66.9 (9.48) | 64.3 (9.11) | mNm (oz-in) |
| 8 Back EMF Constant | $K_E$ | 1.16 | 1.97 | 2.72 | V/1000 rpm |
| 9 Torque Constant | $k_M$ | 11.1 | 18.8 | 26.0 | mNm/A |
| 10 Motor Regulation | $R/k^2$ | 1.5 | 1.5 | 1.6 | $10^3$/Nms |
| 11 Motor Regulation | $k/R^{½}$ | 25.5 (3.6) | 26 (3.7) | 25 (3.5) | mNm/W$^{½}$ (oz-in/W$^{½}$) |
| 12 Internal Resistance - Phase to Phase | $R_t$ | 0.19 | 0.52 | 1.08 | ohms |
| 13 Line To Line Resistance At Connectors | $R_L$ | 0.22 | 0.55 | 1.11 | ohms |
| 14 Inductance Phase To Phase | L | 0.02 | 0.06 | 0.12 | mH |
| 15 Mechanical Time Constant | $t_m$ | 1.3 | 1.3 | 1.4 | ms |
| 16 Electrical Time Constant | $t_e$ | 0.12 | 0.12 | 0.11 | ms |

| General Data | | | |
|---|---|---|---|
| 17 Maximum Motor Speed | $n_{max}$ | 20,000 | rpm |
| 18 Ambient Working Temperature Range | | -30 to + 100 (-22 to + 212) | °C (°F) |
| 19 Ambient Storage Temperature Range | | -40 to + 100 (-40 to + 212) | °C (°F) |
| 20 Ball Bearings Preload | | 6.8 | N |
| 21 Axial Static Force w/o Shaft Support (max) | | 45.0 | N |
| 22 Maximum Winding Temperature | | 125 (257) | °C (°F) |
| 23 Thermal Resistance | $R_{th1}/R_{th2}$ | 2.0 / 8.8 | °C/W |
| 24 Thermal Time Constant | $t_w$ | 980 | s |
| 25 Weight | | 123 (4.34) | g (oz) |
| 26 Rotor Inertia | J | 8.71 | g.cm$^2$ |
| 27 Hall Sensor Electrical Phasing | | 120 | Electrical ° |

| with hall effect sensors | |
|---|---|
| **Wire** | **Description** |
| Grey | Phase 1 |
| Violet | Phase 2 |
| Blue | Phase 3 |
| Green | 3.5 to 24V |
| Yellow | GND |
| Orange | Sensor 1 |
| Red | Sensor 2 |
| Brown | Sensor 3 |
| Black | Thermistor (+) |
| White | Thermistor (-) |

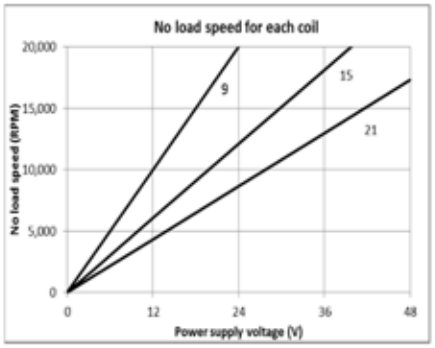


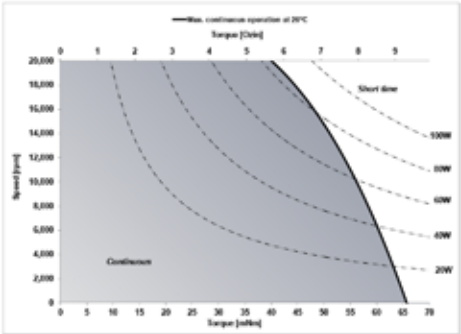

V121616

## 22ECT82 Ultra EC™ 4 pole Ø22mm 104W

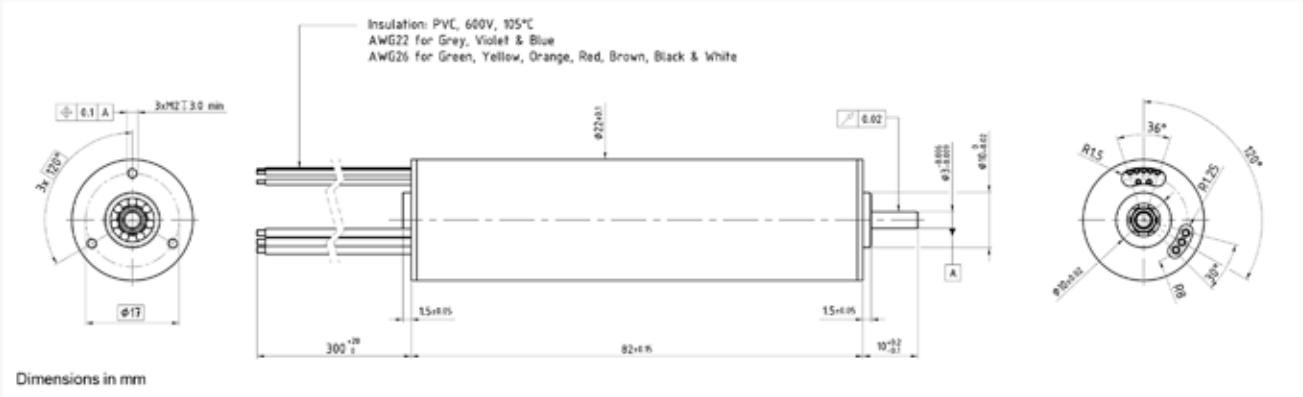


### 22ECT82 10B - **

| Electrical Data | ** | 6 | 9 | 15 | |
|---|---|---|---|---|---|
| 1 Nominal Voltage | $U_N$ | 24 | 24 | 24 | Volt |
| 2 Optimization Direction | - | Symmetrical | Symmetrical | Symmetrical | - |
| 3 No-Load Speed | $n_0$ | 18,550 | 12,390 | 7,800 | rpm |
| 4 Typical No-load Current | $I_0$ | 435 | 250 | 130 | mA |
| 5 Max Continuous Mechanical Power (@25°C) | $P_{max}$ | 104 | 104 | 104 | W |
| 6 Max Continuous Current | $I_{e\,max}$ | 7.9 | 5.3 | 3.2 | A |
| 7 Max Continuous Torque | $M_{e\,max}$ | 98.4 (13.94) | 98.8 (14) | 98.3 (13.92) | mNm (oz-in) |
| 8 Back EMF Constant | $K_E$ | 1.30 | 1.96 | 3.22 | V/1000 rpm |
| 9 Torque Constant | $k_M$ | 12.4 | 18.7 | 30.8 | mNm/A |
| 10 Motor Regulation | $R/k^2$ | 0.8 | 0.8 | 0.8 | $10^3$/Nms |
| 11 Motor Regulation | $k/R^{½}$ | 35.8 (5.1) | 35.9 (5.1) | 36 (5.1) | mNm/W$^{½}$ (oz-in/W$^{½}$) |
| 12 Internal Resistance - Phase to Phase | $R_t$ | 0.13 | 0.27 | 0.73 | ohms |
| 13 Line To Line Resistance At Connectors | $R_L$ | 0.16 | 0.30 | 0.76 | ohms |
| 14 Inductance Phase To Phase | L | 0.02 | 0.03 | 0.09 | mH |
| 15 Mechanical Time Constant | $t_m$ | 1.1 | 1.0 | 1.0 | ms |
| 16 Electrical Time Constant | $t_e$ | 0.12 | 0.13 | 0.13 | ms |

| General Data | | | |
|---|---|---|---|
| 17 Maximum Motor Speed | $n_{max}$ | 20,000 | rpm |
| 18 Ambient Working Temperature Range | | -30 to + 100 (-22 to + 212) | °C (°F) |
| 19 Ambient Storage Temperature Range | | -40 to + 100 (-40 to + 212) | °C (°F) |
| 20 Ball Bearings Preload | | 6.8 | N |
| 21 Axial Static Force w/o Shaft Support (max) | | 45.0 | N |
| 22 Maximum Winding Temperature | | 125 (257) | °C (°F) |
| 23 Thermal Resistance | $R_{th1}/R_{th2}$ | 1.4 / 8.2 | °C/W |
| 24 Thermal Time Constant | $t_w$ | 1,140 | s |
| 25 Weight | | 174 (6.14) | g (oz) |
| 26 Rotor Inertia | J | 13.17 | g.cm$^2$ |
| 27 Hall Sensor Electrical Phasing | | 120 | Electrical ° |

| with hall effect sensors | |
|---|---|
| **Wire** | **Description** |
| Grey | Phase 1 |
| Violet | Phase 2 |
| Blue | Phase 3 |
| Green | 3.5 to 24V |
| Yellow | GND |
| Orange | Sensor 1 |
| Red | Sensor 2 |
| Brown | Sensor 3 |
| Black | Thermistor (+) |
| White | Thermistor (-) |

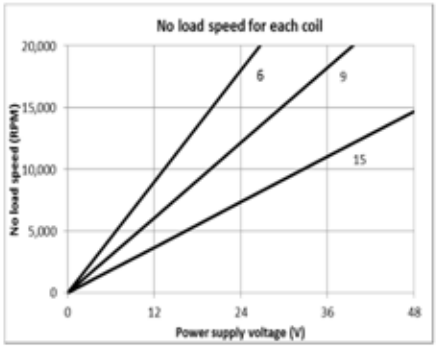


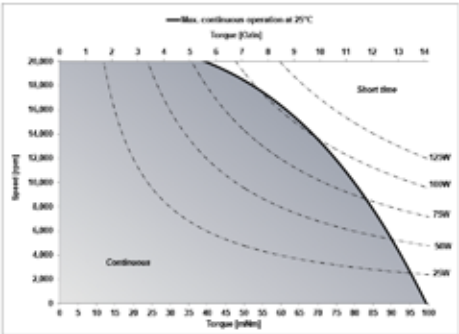


V121616

## 26BC 3C 2 pole Ø26mm 8 W

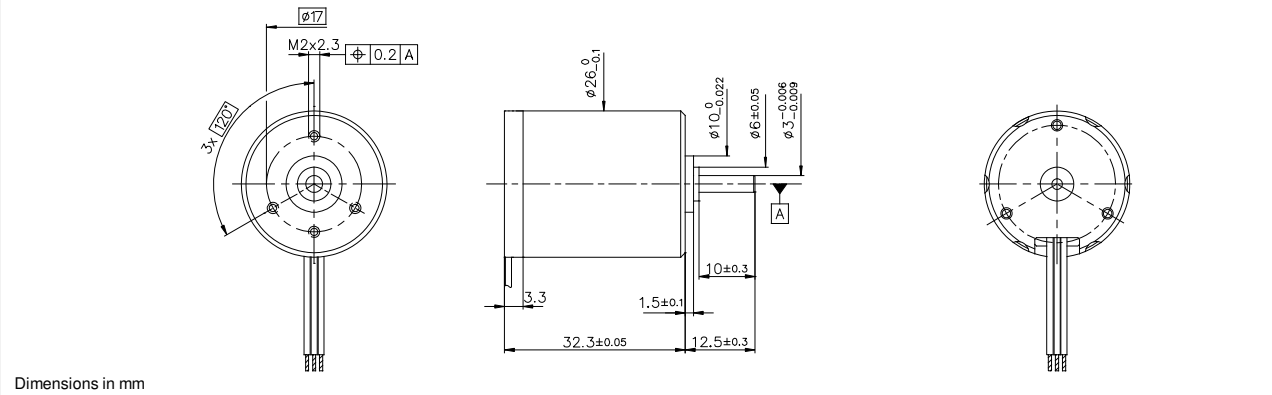


Dimensions in mm

### 26BC 3C - **

| Electrical Data | ** | 109P | |
|---|---|---|---|
| 1 Nominal Voltage | $U_N$ | 12 | Volt |
| 2 Optimization Direction | - | n.a. | - |
| 3 No-Load Speed | $n_0$ | 14,800 | rpm |
| 4 Typical No-Load Current | $I_0$ | 180.0 | mA |
| 5 Max Continuous Mechanical Power (@25°C) | $P_{max}$ | 8.0 | W |
| 6 Max Continuous Current | $I_{e\,max}$ | 0.8 | A |
| 7 Max Continuous Torque | $M_{e\,max}$ | 7 (1) | mNm (oz-in) |
| 8 Back EMF Constant | $K_E$ | 0.73 | V/1000 rpm |
| 9 Torque Constant | $k_M$ | 7.0 | mNm/A |
| 10 Motor Regulation | $R/k^2$ | 102.0 | $10^3$/Nms |
| 11 Motor Regulation | $k/R^{½}$ | 3.1 (0.44) | mNm/$W^{½}$ (oz-in/$W^{½}$) |
| 12 Internal Resistance - phase to phase | $R_I$ | 5.00 | ohms |
| 13 Line to Line Resistance at Connectors | $R_L$ | 5.00 | ohms |
| 14 Inductance Phase to Phase | L | 0.09 | mH |
| 15 Mechanical Time Constant | $t_m$ | 95.0 | ms |
| 16 Electrical Time Constant | $t_e$ | 0.02 | ms |

| General Data | | | |
|---|---|---|---|
| 17 Maximum Motor Speed | $n_{max}$ | 20,000 | rpm |
| 18 Ambient Working Temperature Range | - | 0 to + 70 (+32 to +158) | °C (°F) |
| 19 Ambient Storage Temperature Range | - | 0 to + 70 (+32 to +158) | °C (°F) |
| 20 Ball Bearings Preload | - | 5.0 | N |
| 21 Axial Static Force w/o Shaft Support (max) | - | 45.0 | N |
| 22 Maximum Winding Temperature | - | 125 (257) | °C (°F) |
| 23 Thermal Resistance | $R_{th}$ | 14.0 | °C/W |
| 24 Thermal Time Constant | $t_w$ | 660 | s |
| 25 Weight | - | 72 (2.54) | g (oz) |
| 26 Rotor Inertia | J | 9.400 | $g.cm^2$ |
| 27 Hall Sensor Electrical Phasing | - | NA | Electrical ° |

| sensorless | |
|---|---|
| **Wire** | **Description** |
| Grey | Phase 1 |
| Violet | Phase 2 |
| Blue | Phase 3 |

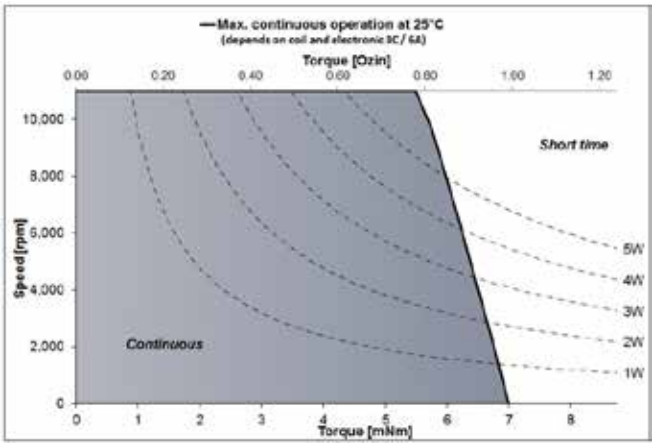


V121616

## 26BC 6A 2 pole Ø26mm 4.5 W

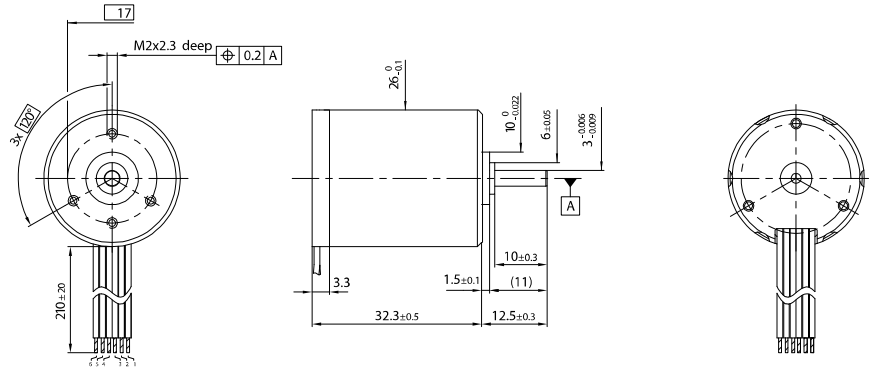


Dimensions in mm

### 26BC 6A - **

| Electrical Data | ** | 119 | 113 | 110 | 107 | |
|---|---|---|---|---|---|---|
| 1 Nominal Voltage | $U_N$ | 7.5 | 7.5 | 15 | 15 | Volt |
| 2 Optimization Direction | - | Symetrical | Symetrical | Symetrical | Symetrical | - |
| 3 No-Load Speed | $n_0$ | 12,500 | 7,250 | 9,300 | 4,700 | rpm |
| 4 Typical No-Load Current | $I_0$ | 250.0 | 170.0 | 120.0 | 50.0 | mA |
| 5 Max Continuous Mechanical Power (@25°C) | $P_{max}$ | 4.5 | 4.5 | 4.5 | 4.5 | W |
| 6 Max Continuous Current | $I_{e\,max}$ | 1.2 | 0.6 | 0.4 | 0.2 | A |
| 7 Max Continuous Torque | $M_{e\,max}$ | 4 (0.57) | 4.2 (0.6) | 4.4 (0.63) | 4 (0.57) | mNm (oz-in) |
| 8 Back EMF Constant | $K_E$ | 0.56 | 0.96 | 1.40 | 2.66 | V/1000 rpm |
| 9 Torque Constant | $k_M$ | 5.4 | 9.2 | 13.4 | 25.4 | mNm/A |
| 10 Motor Regulation | $R/k^2$ | 65.2 | 80.3 | 98.0 | 107.0 | $10^3$/Nms |
| 11 Motor Regulation | $k/R^{½}$ | 3.92 (0.56) | 3.53 (0.5) | 3.19 (0.46) | 3.06 (0.44) | $mNm/W^{½}$ ($oz\text{-}in/W^{½}$) |
| 12 Internal Resistance - phase to phase | $R_I$ | 1.90 | 6.80 | 17.60 | 69.00 | ohms |
| 13 Line to Line Resistance at Connectors | $R_L$ | 1.90 | 6.80 | 17.60 | 69.00 | ohms |
| 14 Inductance Phase to Phase | L | 0.03 | 0.12 | 0.32 | 1.23 | mH |
| 15 Mechanical Time Constant | $t_m$ | 61.0 | 75.0 | 92.0 | 100.0 | ms |
| 16 Electrical Time Constant | $t_e$ | 0.02 | 0.02 | 0.02 | 0.02 | ms |

| General Data | | | |
|---|---|---|---|
| 17 Maximum Motor Speed | $n_{max}$ | 14,000 | rpm |
| 18 Ambient Working Temperature Range | - | 0 to + 70 (+32 to +158) | °C (°F) |
| 19 Ambient Storage Temperature Range | - | 0 to + 70 (+32 to +158) | °C (°F) |
| 20 Ball Bearings Preload | - | 5.0 | N |
| 21 Axial Static Force w/o Shaft Support (max) | - | 45.0 | N |
| 22 Maximum Winding Temperature | - | 125 (257) | °C (°F) |
| 23 Thermal Resistance | $R_{th}$ | 14.0 | °C/W |
| 24 Thermal Time Constant | $t_w$ | 660 | s |
| 25 Weight | - | 72 (2.54) | g (oz) |
| 26 Rotor Inertia | J | 9.400 | $g.cm^2$ |
| 27 Hall Sensor Electrical Phasing | - | NA | Electrical ° |

| integrated electronics | |
|---|---|
| **Wire** | **Description** |
| Brow n | Ground |
| Red | Pow er supply voltage(2.5 - 18 V) |
| Orange | Direction CCW/CW |
| Yellow | Enable start / stop |
| Green | Logic supply voltage(5 - 18 V) |
| Blue | Speed signal |

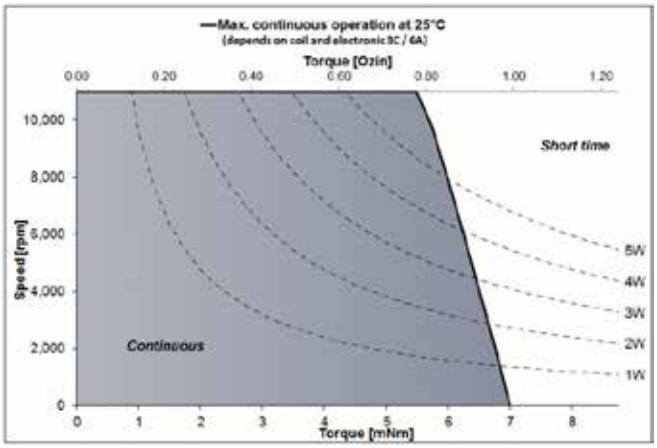


V121616

## 21BF nuvoDisc™ 8 pole Ø21mm 4 W

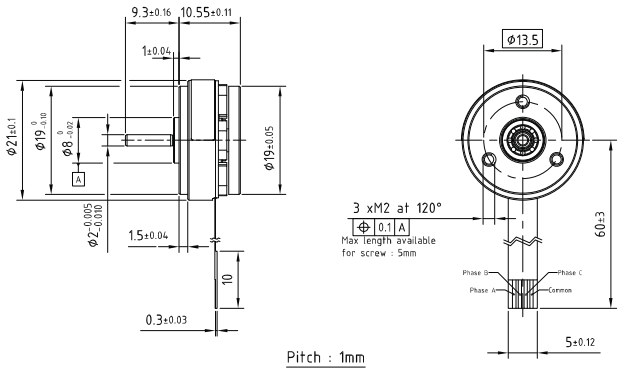


Dimensions in mm

### 21BF 3C - **

| Electrical Data | ** | K | |
|---|---|---|---|
| 1 Nominal Voltage | $U_N$ | 5 | Volt |
| 2 Optimization Direction | - | n.a. | - |
| 3 No-Load Speed | $n_0$ | 3,900 | rpm |
| 4 Typical No-Load Current | $I_0$ | 28.0 | mA |
| 5 Max Continuous Mechanical Power (@25°C) | $P_{max}$ | 4.0 | W |
| 6 Max Continuous Current | $I_{e\,max}$ | 0.3 | A |
| 7 Max Continuous Torque | $M_{e\,max}$ | 2.7 (0.39) | mNm (oz-in) |
| 8 Back EMF Constant | $K_E$ | 0.89 | V/1000 rpm |
| 9 Torque Constant | $k_M$ | 8.5 | mNm/A |
| 10 Motor Regulation | $R/k^2$ | 784.0 | $10^3$/Nms |
| 11 Motor Regulation | $k/R^{½}$ | 1.1 (0.16) | mNm/$W^{½}$ (oz-in/$W^{½}$) |
| 12 Internal Resistance - phase to phase | $R_l$ | 56.30 | ohms |
| 13 Line to Line Resistance at Connectors | $R_L$ | 56.30 | ohms |
| 14 Inductance Phase to Phase | L | 1.22 | mH |
| 15 Mechanical Time Constant | $t_m$ | 141.2 | ms |
| 16 Electrical Time Constant | $t_e$ | 0.02 | ms |

| General Data | | | |
|---|---|---|---|
| 17 Maximum Motor Speed | $n_{max}$ | 25000 | rpm |
| 18 Ambient Working Temperature Range | - | -30 to +80 (-22 to +176) | °C (°F) |
| 19 Ambient Storage Temperature Range | - | -40 to +80 (-40 to +176) | °C (°F) |
| 20 Ball Bearings Preload | - | 2.70 | N |
| 21 Axial Static Force w/o Shaft Support (max) | - | 27.00 | N |
| 22 Maximum Winding Temperature | - | 125 (257) | °C (°F) |
| 23 Thermal Resistance | $R_{th1}/R_{th2}$ | 12.00 | °C/W |
| 24 Thermal Time Constant | $t_w$ | 200.00 | s |
| 25 Weight | - | 10 (0.36) | g (oz) |
| 26 Rotor Inertia | J | 1.80 | $g.cm^2$ |
| 27 Hall Sensor Electrical Phasing | - | NA | Electrical ° |

| sensorless | |
|---|---|
| Wire | Description |
| Common connection | center point of Y winding |

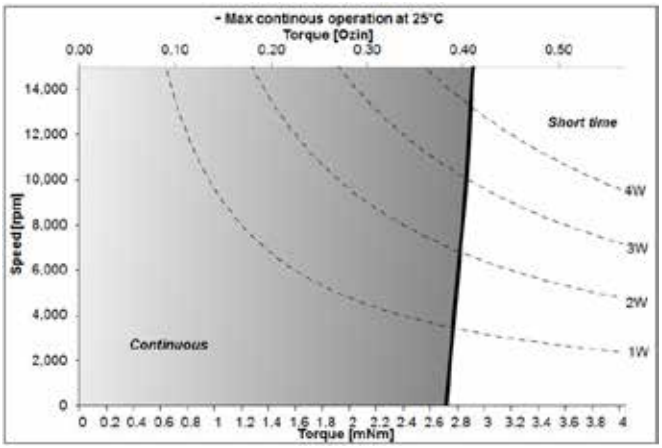


V121616

## 32BF nuvoDisc™ 8 pole Ø32mm 40 W

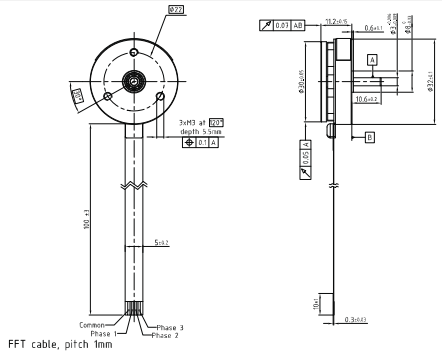


Dimensions in mm

| | 32BF 3C - ** | 32BF 8B - ** | |
|---|---|---|---|
| **Electrical Data** | ** | K | |
| 1 Nominal Voltage | $U_N$ | 12 | Volt |
| 2 Optimization Direction | - | Symetrical | - |
| 3 No-Load Speed | $n_0$ | 13,600 | rpm |
| 4 Typical No-Load Current | $I_0$ | 100.0 | mA |
| 5 Max Continuous Mechanical Power (@25°C) | $P_{max}$ | 40.0 | W |
| 6 Max Continuous Current | $I_{e\,max}$ | 1.5 | A |
| 7 Max Continuous Torque | $M_{e\,max}$ | 13 (1.85) | mNm (oz-in) |
| 8 Back EMF Constant | $K_E$ | 0.87 | V/1000 rpm |
| 9 Torque Constant | $k_M$ | 8.3 | mNm/A |
| 10 Motor Regulation | $R/k^2$ | 57.5 | $10^3$/Nms |
| 11 Motor Regulation | $k/R^{½}$ | 4.2 (0.6) | mNm/$W^{½}$ (oz-in/$W^{½}$) |
| 12 Internal Resistance - phase to phase | $R_l$ | 3.95 | ohms |
| 13 Line to Line Resistance at Connectors | $R_L$ | 3.95 | ohms |
| 14 Inductance Phase to Phase | L | 0.12 | mH |
| 15 Mechanical Time Constant | $t_m$ | 64.9 | ms |
| 16 Electrical Time Constant | $t_e$ | 0.03 | ms |
| **General Data** | | | |
| 17 Maximum Motor Speed | $n_{max}$ | 30,000 | rpm |
| 18 Ambient Working Temperature Range | - | -30 to +80 (-22 to +176) | °C (°F) |
| 19 Ambient Storage Temperature Range | - | -40 to +80 (-40 to +176) | °C (°F) |
| 20 Ball Bearings Preload | - | 2.7 | N |
| 21 Axial Static Force w/o Shaft Support (max) | - | 27.0 | N |
| 22 Maximum Winding Temperature | - | 125 (257) | °C (°F) |
| 23 Thermal Resistance | $R_{th}$ | 13.0 | °C/W |
| 24 Thermal Time Constant | $t_w$ | 550 | s |
| 25 Weight | - | 27 (0.96) | g (oz) |
| 26 Rotor Inertia | J | 11.300 | g.$cm^2$ |
| 27 Hall Sensor Electrical Phasing | - | 120 | Electrical ° |

| with hall effect sensors | |
|---|---|
| **Wire** | **Description** |
| VDD connection | 3.5 to 27V DC |

| sensorless | |
|---|---|
| **Wire** | **Description** |
| Common connection | center point of Y winding |

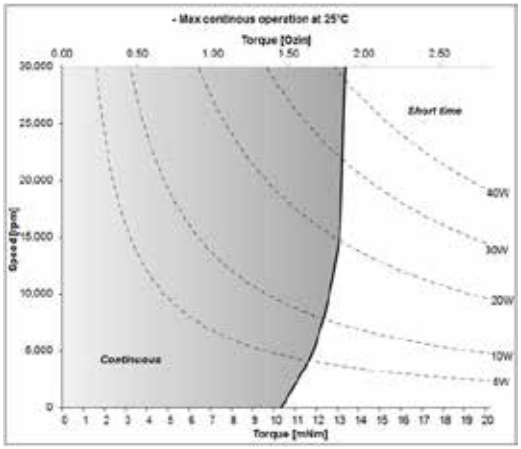


V121616

# Motors For Surgical Applications

Epitomizing the exceptional quality of the Portescap brand, our application specific surgical motors are designed to meet the specialized performance requirements of high-precision powered surgical hand tools. With 20 years of experience designing and manufacturing motors for surgical applications, we know how speed, torque and efficiency affect the performance of powered surgical hand tools. Portescap's autoclavable brushless DC motors, designed to provide high torque in a lightweight ergonomic package, excel at meeting the requirements for exceptional surgical results, and have the robustness to withstand sterilization and exposure to saline.

**Spine Drills**

**ENT Microdebriders**

**Arthroscopic Shavers**

**Large Bone Drills**

## Application Specific Motors For Powered Surgical Hand Tools

Portescap designs and manufactures mini motors for various medical applications, including arthroscopic shavers, large bone orthopedic drills, ENT microdebriders, ENT drills, high-speed spine and neuro drills, and more.

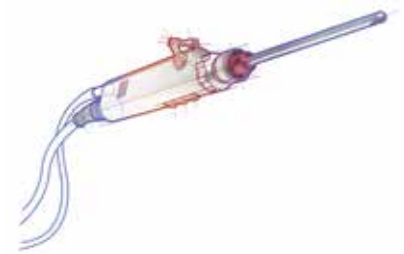

**Arthroscopic joint shavers**
Arthroscopic procedures require high torque, speed and efficiency. Portescap BLDC motors are an ideal solution for powered surgical hand tools used in minimally invasive surgical procedures to repair joints such as the hip, knee, and shoulder.

**ENT microdebriders**
Optimized for ENT microdebrider (ENT shaver) applications, motor torque and speed make Portescap motors an ideal solution for powered surgical hand tools used in minimally invasive surgical procedures of the ear, nose and throat. Also see our ENT drill motor for high-speed drilling applications.

**Large bone orthopedic drills**
Orthopedic surgery procedures require high torque, speed and efficiency. Portescap BLDC motors enable the design of lightweight and powerful orthopedic drills, screwdrivers and reamers used in joint replacement procedures.

## Working with You to Save, Improve and Enhance Lives

Motor performance tailored to your application requirements

High and low volume manufacturing

Samples available upon request

Vertically integrated design and manufacturing

Contact us for more information about our application specific surgical motors or to review requirements of your surgical application.

North America **Sales.america@portescap.com**
South America **Vendas@portescap.com**
Europe, Middle East, Africa **Sales.europe@portescap.com**
Asia, India **Sales.asia@portescap.com**

## ARTHROSCOPIC JOINT SHAVER – Brushless Slotted

∅ 0.65 in.

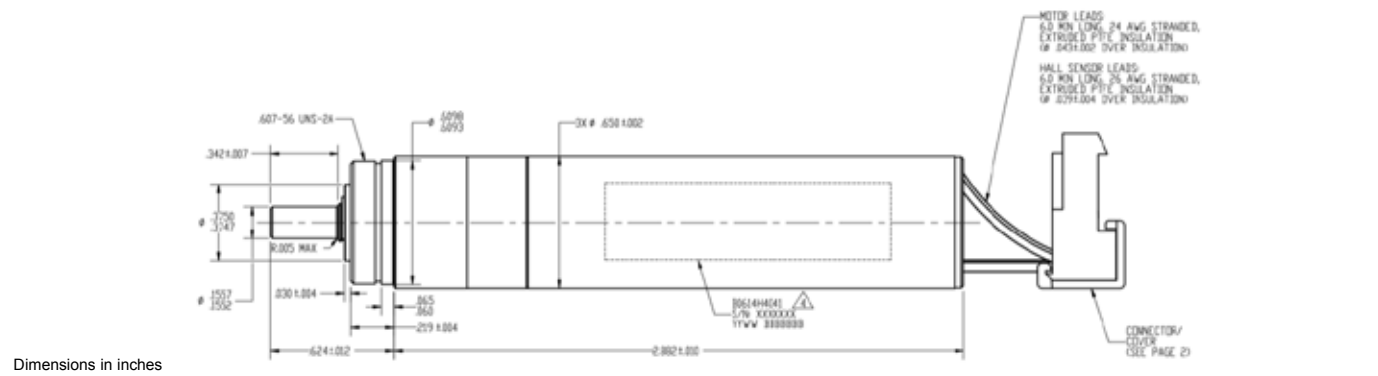


Dimensions in inches

### B0614H4041

| Electrical Data | | Part Number | B0614H4041 | Units |
|---|---|---|---|---|
| 1 | Nominal Voltage | $U_N$ | 24 | Volt |
| 2 | Max No-Load Current ( ±50%) | $I_{nl}$ | 645 | mA |
| 3 | No-Load Speed | Wnl | 7,277 | rpm |
| 4 | Resistance - Phase to Phase | R | 0.36 | ohm |
| 5 | Continuous Stall Torque | Tcs | 117.7 (16.7) | mNm (oz-in) |
| 6 | Continuous Stall Current | Ics | 4.37 | A |
| 7 | Peak Torque for 1s | Tpk | 1865 (264) | mNm (oz-in) |
| 8 | Peak Current | Ipk | 66.0 | A |
| 9 | Back EMF Constant | $K_e$ | 3.300 | v/1000 rpm |
| 10 | Torque Constant | $K_t$ | 31.38 (4.44) | mNm/A (oz.-in/A) |
| 11 | Motor Regulation R/Kt^2 | - | 0.4 | $10^3$/Nms |
| 12 | Motor Regulation Kt/R½ | - | 52.3 | mNm/W½ |
| 13 | Inductance - Phase to Phase | L | 0.060 | mH @1Khz |
| **General Data** | | | | |
| 14 | Thermal Resistance (winding to ambient) | $R_{th}$ | 12.5 | °C/W |
| 15 | Thermal Time Constant | $t_w$ | 950 | s |
| 16 | Mechanical Time Constant | $t_m$ | 2.50 | ms |
| 17 | Electrical Time Constant | $t_e$ | 0.16 | ms |
| 18 | Rotor Inertia | J | 12.56 (17.8) | $kgm^2\ 10^{-8}$ ($oz\text{-}in\text{-}sec^2\ 10^{-6}$) |
| 19 | Max Winding Temperature | - | 155 (311) | °C (°F) |
| 20 | Shaft Load Max.: radial (static) | - | 63.0 (14.2), @ 5mm from front of bearing | N (lb) |
| | axial (static) | - | 30.56 (6.87) | N (lb) |
| 21 | Mass | M | 107 (3.8) | g (oz) |
| 22 | Length | L | 73.3 (2.9) | mm (in) |
| 23 | Tolerances | - | Tolerances on all values ±10% unless otherwise specified. | |

| Lead color | Function |
|---|---|
| Blue | Phase A |
| Brown | Phase B |
| Violet | Phase C |
| Red | 4.5 to 24 vdc |
| Yellow | Hall 1 |
| Orange | Hall 2 |
| White | Hall 3 |
| Black | Supply RTN |

Notes
- Solution includes a BLDC motor and 6:1 gearhead
- Three phase motor with Wye connections
- Designed for sterilization in an autoclavable
- Hall sensors: supply voltage 4.5V - 24V
- Typical housing material 303 SS
- Typical shaft material 17-4 PH
- Motor is RoHS Compliant
- Above parameters specified for 25 Deg C ambient temperature

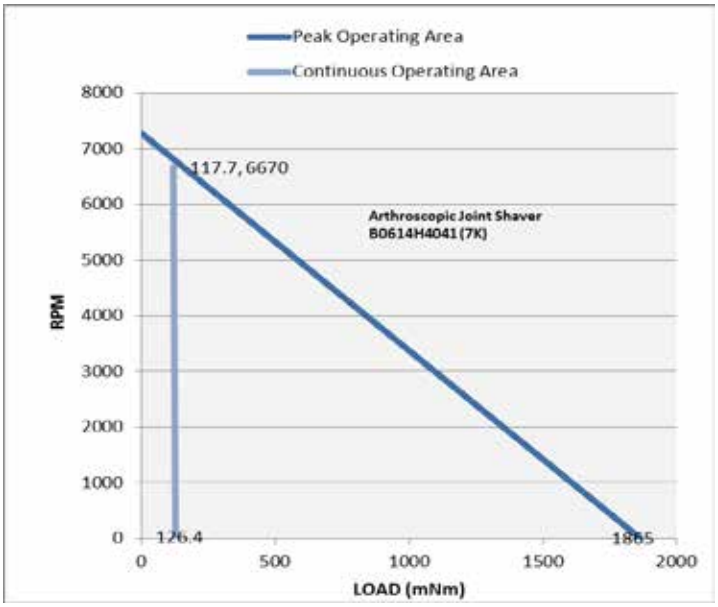


V121616

## ARTHROSCOPIC JOINT SHAVER – Brushless Slotted

∅ 0.65 in.

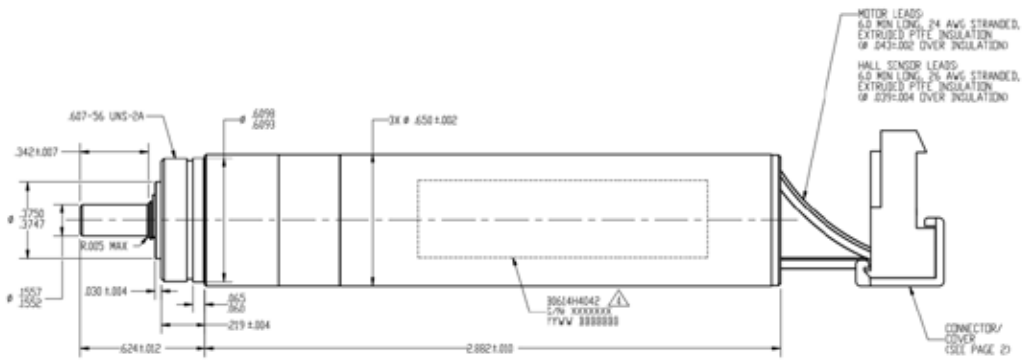


Dimensions in inches

### B0614H4042

| Electrical Data | | Part Number | B0614H4042 | Units |
|---|---|---|---|---|
| 1 | Nominal Voltage | $U_N$ | 24 | Volt |
| 2 | Max No-Load Current ( ±50%) | $I_{nl}$ | 600 | mA |
| 3 | No-Load Speed | Wnl | 4,255 | rpm |
| 4 | Resistance - Phase to Phase | R | 1.03 | ohm |
| 5 | Continuous Stall Torque | Tcs | 119.4 (16.9) | mNm (oz-in) |
| 6 | Continuous Stall Current | Ics | 2.59 | A |
| 7 | Peak Torque for 1s | Tpk | 1110.1 (157.2) | mNm (oz-in) |
| 8 | Peak Current | Ipk | 22.9 | A |
| 9 | Back EMF Constant | $K_e$ | 5.640 | v/1000 rpm |
| 10 | Torque Constant | $K_t$ | 53.88 (7.62) | mNm/A (oz.-in/A) |
| 11 | Motor Regulation R/Kt^2 | - | 0.4 | $10^3$/Nms |
| 12 | Motor Regulation Kt/R½ | - | 53.1 | mNm/W½ |
| 13 | Inductance - Phase to Phase | L | 0.180 | mH @1Khz |
| **General Data** | | | | |
| 14 | Thermal Resistance (winding to ambient) | $R_{th}$ | 12.5 | °C/W |
| 15 | Thermal Time Constant | $t_w$ | 950 | s |
| 16 | Mechanical Time Constant | $t_m$ | 2.43 | ms |
| 17 | Electrical Time Constant | $t_e$ | 0.17 | ms |
| 18 | Rotor Inertia | J | 12.56 (17.8) | $kgm^2\ 10^{-8}$ ($oz\text{-}in\text{-}sec^2\ 10^{-6}$) |
| 19 | Max Winding Temperature | - | 155 (311) | °C (°F) |
| 20 | Shaft Load Max.: radial (static) | - | 63.0 (14.2), @ 5mm from front of bearing | N (lb) |
| | axial (static) | - | 30.56 (6.87) | N (lb) |
| 21 | Mass | M | 107 (3.8) | g (oz) |
| 22 | Length | L | 73.3 (2.9) | mm (in) |
| 23 | Tolerances | - | Tolerances on all values ±10% unless otherwise specified. | |

| Lead color | Function |
|---|---|
| Blue | Phase A |
| Brown | Phase B |
| Violet | Phase C |
| Red | 4.5 to 24 vdc |
| Yellow | Hall 1 |
| Orange | Hall 2 |
| White | Hall 3 |
| Black | Supply RTN |

Notes
- Solution includes a BLDC motor and 6:1 gearhead
- Three phase motor with Wye connections
- Designed for sterilization in an autoclavable
- Hall sensors: supply voltage 4.5V - 24V
- Typical housing material 303 SS
- Typical shaft material 17-4 PH
- Motor is RoHS Compliant
- Above parameters specified for 25 Deg C ambient temperature

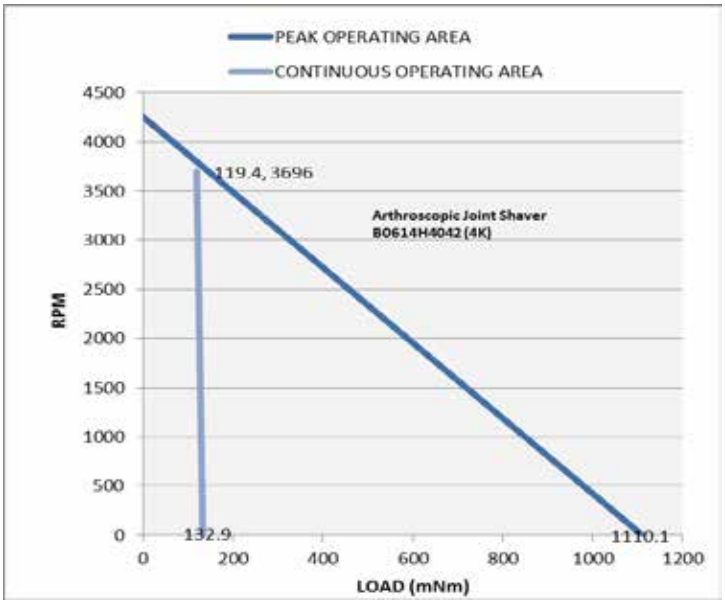


V121616

## ENT MICRODEBRIDER (24V) – Brushless Slotted

∅ 0.5 in.

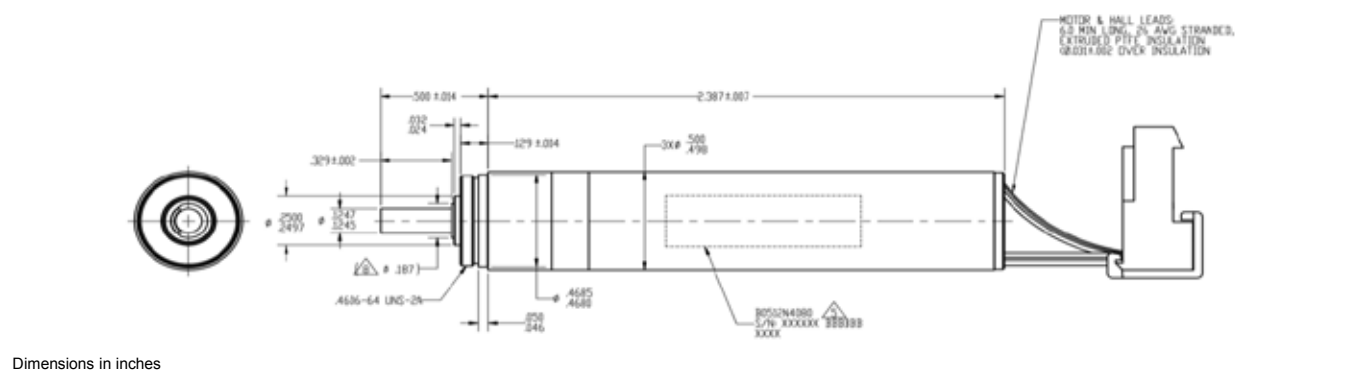


Dimensions in inches

### B0512N4080

| Electrical Data | | Part Number | B0512N4080 | Units |
|---|---|---|---|---|
| 1 | Nominal Voltage | $U_N$ | 24 | Volt |
| 2 | Max No-Load Current ( ±50%) | $I_{nl}$ | 855 | mA |
| 3 | No-Load Speed | Wnl | 11,829 | rpm |
| 4 | Resistance - Phase to Phase | R | 0.91 | ohm |
| 5 | Continuous Stall Torque | Tcs | 39.5 (5.6) | mNm (oz-in) |
| 6 | Continuous Stall Current | Ics | 2.44 | A |
| 7 | Peak Torque for 1s | Tpk | 449.3 (63.6) | mNm (oz-in) |
| 8 | Peak Current | Ipk | 26.4 | A |
| 9 | Back EMF Constant | $K_e$ | 1.980 | v/1000 rpm |
| 10 | Torque Constant | $K_t$ | 18.9 (2.7) | mNm/A (oz.-in/A) |
| 11 | Motor Regulation R/Kt^2 | - | 2.5 | $10^3$/Nms |
| 12 | Motor Regulation Kt/R½ | - | 19.8 | mNm/W½ |
| 13 | Inductance - Phase to Phase | L | 0.062 | mH @1Khz |
| **General Data** | | | | |
| 14 | Thermal Resistance (winding to ambient) | $R_{th}$ | 15.9 | °C/W |
| 15 | Thermal Time Constant | $t_w$ | 490 | s |
| 16 | Mechanical Time Constant | $t_m$ | 3.03 | ms |
| 17 | Electrical Time Constant | $t_e$ | 0.07 | ms |
| 18 | Rotor Inertia | J | 3.15 (4.46) | $kgm^2\ 10^{-8}$ ($oz\text{-}in\text{-}sec^2\ 10^{-6}$) |
| 19 | Max Winding Temperature | - | 155 (311) | °C (°F) |
| 20 | Shaft Load Max.: radial (static) | - | 19.25 (4.3), @ 5mm from front of bearing | N (lb) |
| | axial (static) | - | 3.27 (0.74) | N (lb) |
| 21 | Mass | M | 48 (1.7) | g (oz) |
| 22 | Length | L | 61 (2.39) | mm (in) |
| 23 | Tolerances | - | Tolerances on all values ±10% unless otherwise specified. | |

| Lead color | Function |
|---|---|
| Blue | Phase A |
| Brown | Phase B |
| Violet | Phase C |
| Red | 4.5 to 24 vdc |
| Yellow | Hall 1 |
| Orange | Hall 2 |
| White | Hall 3 |
| Black | Supply RTN |

Notes
- Solution includes a BLDC motor and 5:1 gearhead
- Three phase motor with Wye connections
- Designed for sterilization in an autoclavable
- Hall sensors: supply voltage 4.5V - 24V
- Typical housing material 303 SS
- Typical shaft material 17-4 PH
- Motor is RoHS Compliant
- Above parameters specified for 25 Deg C ambient

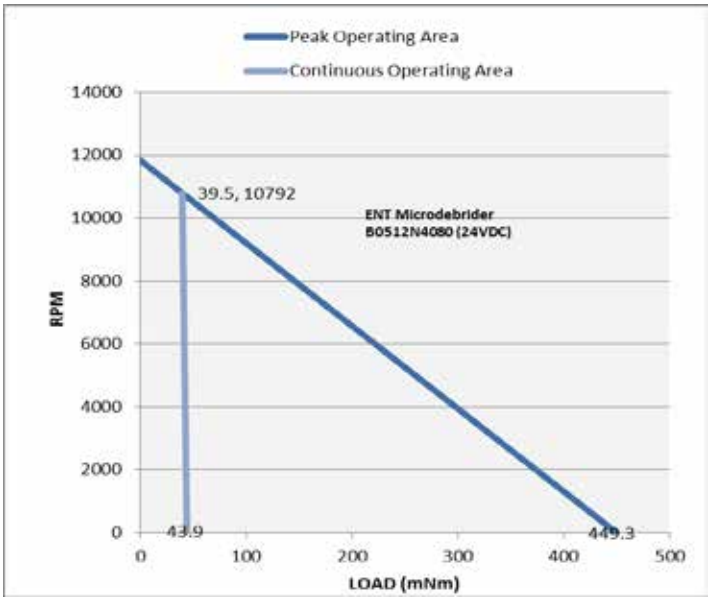


V121616

## ENT MICRODEBRIDER (48V) – Brushless Slotted

∅ 0.5 in.

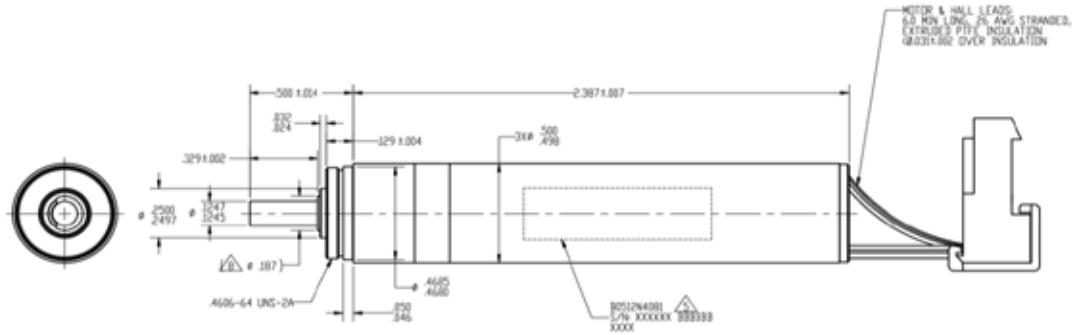

Dimensions in inches

### B0512N4081

| Electrical Data | | Part Number | B0512N4081 | Units |
|---|---|---|---|---|
| 1 | Nominal Voltage | $U_N$ | 48 | Volt |
| 2 | Max No-Load Current ( ±50%) | $I_{nl}$ | 375 | mA |
| 3 | No-Load Speed | Wnl | 11,910 | rpm |
| 4 | Resistance - Phase to Phase | R | 3.34 | ohm |
| 5 | Continuous Stall Torque | Tcs | 41.3 (5.9) | mNm (oz-in) |
| 6 | Continuous Stall Current | Ics | 1.27 | A |
| 7 | Peak Torque for 1s | Tpk | 490.7 (69.5) | mNm (oz-in) |
| 8 | Peak Current | Ipk | 14.4 | A |
| 9 | Back EMF Constant | $K_e$ | 3.965 | v/1000 rpm |
| 10 | Torque Constant | $K_t$ | 37.85 (5.35) | mNm/A (oz.-in/A) |
| 11 | Motor Regulation R/Kt^2 | - | 2.3 | $10^9$/Nms |
| 12 | Motor Regulation Kt/R½ | - | 20.7 | mNm/W½ |
| 13 | Inductance - Phase to Phase | L | 0.250 | mH @1Khz |
| **General Data** | | | | |
| 14 | Thermal Resistance (winding to ambient) | $R_{th}$ | 15.9 | °C/W |
| 15 | Thermal Time Constant | $t_w$ | 490 | s |
| 16 | Mechanical Time Constant | $t_m$ | 2.77 | ms |
| 17 | Electrical Time Constant | $t_e$ | 0.07 | ms |
| 18 | Rotor Inertia | J | 3.15 (4.46) | $kgm^2\ 10^{-8}$ (oz-in-sec$^2$ $10^{-6}$) |
| 19 | Max Winding Temperature | - | 155 (311) | °C (°F) |
| 20 | Shaft Load Max.: radial (static) | - | 19.25 (4.3), @ 5mm from front of bearing | N (lb) |
| | axial (static) | - | 3.27 (0.74) | N (lb) |
| 21 | Mass | M | 48 (1.7) | g (oz) |
| 22 | Length | L | 61 (2.39) | mm (in) |
| 23 | Tolerances | - | Tolerances on all values ±10% unless otherwise specified. | |

| Lead color | Function |
|---|---|
| Blue | Phase A |
| Brown | Phase B |
| Violet | Phase C |
| Red | 4.5 to 24 vdc |
| Yellow | Hall 1 |
| Orange | Hall 2 |
| White | Hall 3 |
| Black | Supply RTN |

Notes
- Solution includes a BLDC motor and 5:1 gearhead
- Three phase motor with Wye connections
- Designed for sterilization in an autoclavable
- Hall sensors: supply voltage 4.5V - 24V
- Typical housing material 303 SS
- Typical shaft material 17-4 PH
- Motor is RoHS Compliant
- Above parameters specified for 25 Deg C ambient temperature

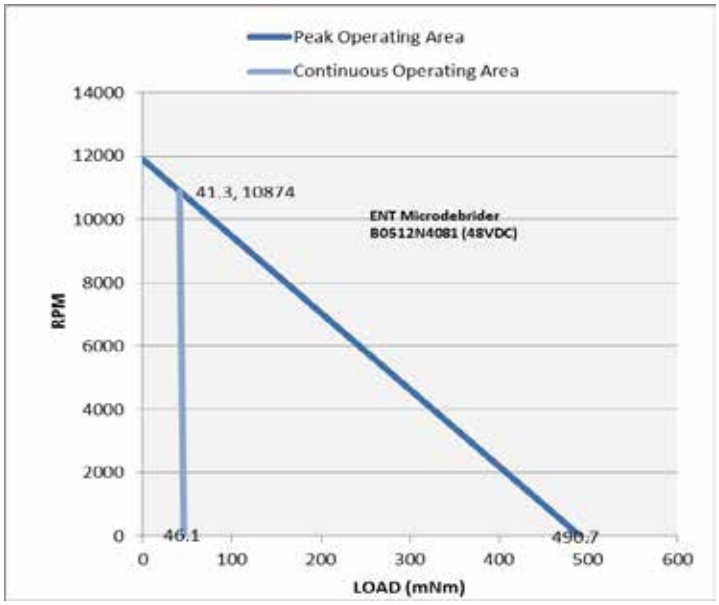


V121616

## SPINE DRILL – Brushless Slotted

∅ 0.5 in.

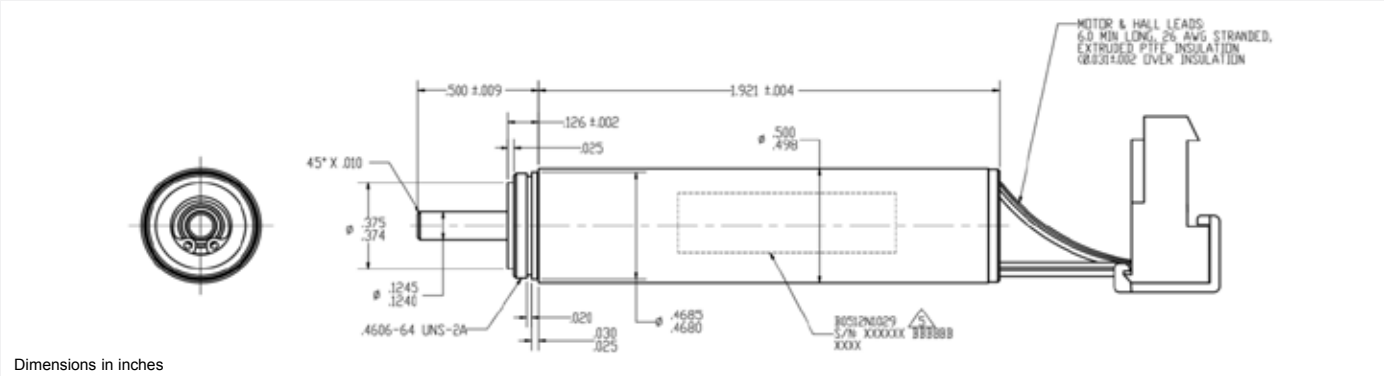


Dimensions in inches

### B0512N1029

| Electrical Data | | Part Number | B0512N1029 | Units |
|---|---|---|---|---|
| 1 | Nominal Voltage | $U_N$ | 48 | Volt |
| 2 | Max No-Load Current ( ±50%) | $I_{nl}$ | 420 | mA |
| 3 | No-Load Speed | Wnl | 90,500 | rpm |
| 4 | Resistance - Phase to Phase | R | 1.46 | ohm |
| 5 | Continuous Stall Torque | Tcs | 9.2 (1.31) | mNm (oz-in) |
| 6 | Continuous Stall Current | Ics | 1.93 | A |
| 7 | Peak Torque for 1s | Tpk | 165.3 (23.4) | mNm (oz-in) |
| 8 | Peak Current | Ipk | 32.8 | A |
| 9 | Back EMF Constant | $K_e$ | 0.528 | v/1000 rpm |
| 10 | Torque Constant | $K_t$ | 5.04 (0.71) | mNm/A (oz.-in/A) |
| 11 | Motor Regulation R/Kt^2 | - | 57.5 | $10^3$/Nms |
| 12 | Motor Regulation Kt/R½ | - | 4.2 | mNm/W½ |
| 13 | Inductance - Phase to Phase | L | 0.110 | mH @1Khz |
| **General Data** | | | | |
| 14 | Thermal Resistance (winding to ambient) | $R_{th}$ | 15.9 | °C/W |
| 15 | Thermal Time Constant | $t_w$ | 490 | s |
| 16 | Mechanical Time Constant | $t_m$ | 2.73 | ms |
| 17 | Electrical Time Constant | $t_e$ | 0.08 | ms |
| 18 | Rotor Inertia | J | 3.15 (4.46) | $kgm^2\ 10^{-8}$ ($oz\text{-}in\text{-}sec^2\ 10^{-6}$) |
| 19 | Max Winding Temperature | - | 155 (311) | °C (°F) |
| 20 | Shaft Load Max.: radial (static) | - | 41.22 (9.27) , @ 5mm from front of bearing | N (lb) |
| | axial (static) | - | 0.01 (0.002) | N (lb) |
| 21 | Mass | M | 38.5 (1.36) | g (oz) |
| 22 | Length L | L | 48.8 (1.92) | mm (in) |
| 23 | Tolerances | - | Tolerances on all values ±10% unless otherwise specified. | |

| Lead color | Function |
|---|---|
| Blue | Phase A |
| Brown | Phase B |
| Violet | Phase C |
| Red | 4.5 to 24 vdc |
| Yellow | Hall 1 |
| Orange | Hall 2 |
| White | Hall 3 |
| Black | Supply RTN |

Notes
- Three phase motor with Wye connections
- Designed for sterilization in an autoclavable
- Hall sensors: supply voltage 4.5V - 24V
- Typical housing material 303 SS
- Typical shaft material 17-4 PH
- Motor is RoHS Compliant
- Above parameters specified for 25 Deg C ambient temperature

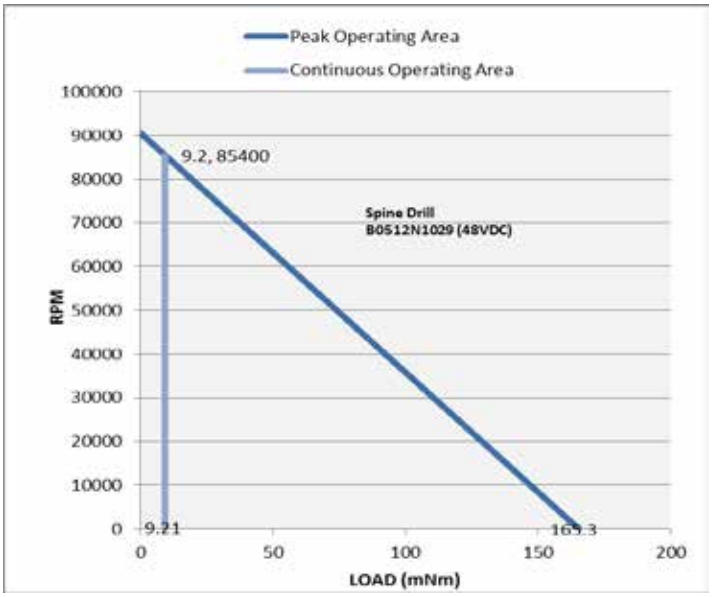


V121616

## LARGE BONE DRILL – Brushless Slotted

∅ 1.1 in.

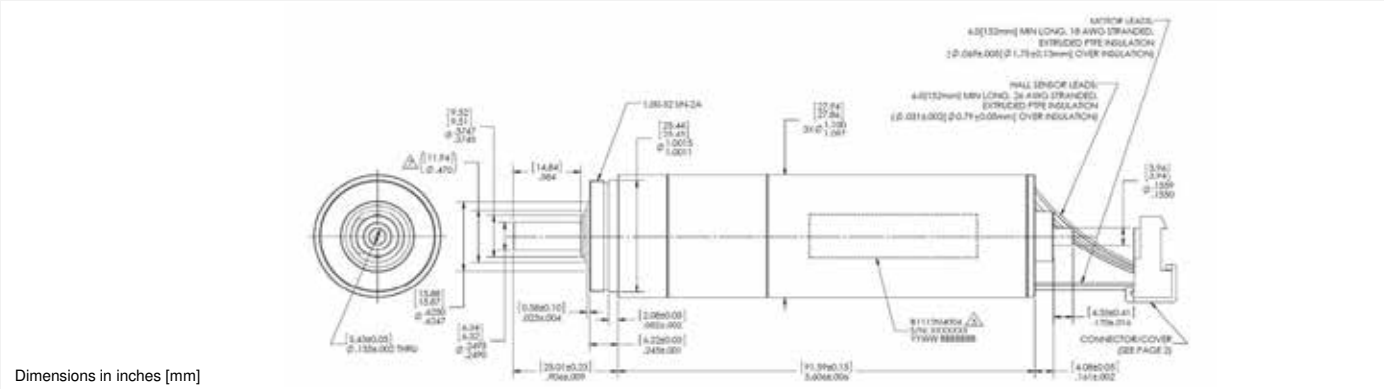

Dimensions in inches [mm]

### B1112N4004

| Electrical Data | | Part Number | B1112N4004 | Units |
|---|---|---|---|---|
| 1 | Nominal Voltage | $U_N$ | 14.4 | Volt |
| 2 | Max No-Load Current ( ±50%) | $I_{nl}$ | 900 | mA |
| 3 | No-Load Speed | Wnl | 957 | rpm |
| 4 | Resistance - Phase to Phase | R | 0.117 | ohm |
| 5 | Continuous Stall Torque | Tcs | 923.4 (130.8) | mNm (oz-in) |
| 6 | Continuous Stall Current | Ics | 9.29 | A |
| 7 | Peak Torque for 1s | Tpk | 14276 (2017.2) | mNm (oz-in) |
| 8 | Peak Current | Ipk | 123.0 | A |
| 9 | Back EMF Constant | $K_e$ | 14.990 | v/1000 rpm |
| 10 | Torque Constant | $K_t$ | 116.0 (16.4) | mNm/A (oz.-in/A) |
| 11 | Motor Regulation R/Kt^2 | - | 0.0087 | $10^3$/Nms |
| 12 | Motor Regulation Kt/R½ | - | 339.0 | mNm/W½ |
| 13 | Inductance - Phase to Phase | L | 0.061 | mH @1Khz |
| **General Data** | | | | |
| 14 | Thermal Resistance (winding to ambient) | $R_{th}$ | 8.3 | °C/W |
| 15 | Thermal Time Constant | $t_w$ | 900 | s |
| 16 | Mechanical Time Constant | $t_m$ | 1.85 | ms |
| 17 | Electrical Time Constant | $t_e$ | 0.52 | ms |
| 18 | Rotor Inertia | J | 84.74 (120.0) | $kgm^2\ 10^{-8}$ ($oz\text{-}in\text{-}sec^2\ 10^{-6}$) |
| 19 | Max Winding Temperature | - | 155 (311) | °C (°F) |
| 20 | Shaft Load Max.: radial (static) | - | 101.31 (22.77) , @ 5mm from front of bearing | N (lb) |
| | axial (static) | - | 55.34 (12.44) | N (lb) |
| 21 | Mass | M | 350 (12.4) | g (oz) |
| 22 | Length L | L | 91.6 (3.61) | mm (in) |
| 23 | Tolerances | - | Tolerances on all values ±10% unless otherwise specified. | |

| Lead color | Function |
|---|---|
| Blue | Phase A |
| Brown | Phase B |
| Violet | Phase C |
| Red | 4.5 to 24 vdc |
| Yellow | Hall 1 |
| Orange | Hall 2 |
| White | Hall 3 |
| Black | Supply RTN |

Notes
- Three phase motor with Wye connections
- Designed for sterilization in an autoclavable
- Hall sensors: supply voltage 4.5V - 24V
- Typical housing material 303 SS
- Typical shaft material 17-4 PH
- Motor is RoHS Compliant
- Above parameters specified for 25 Deg C ambient temperature

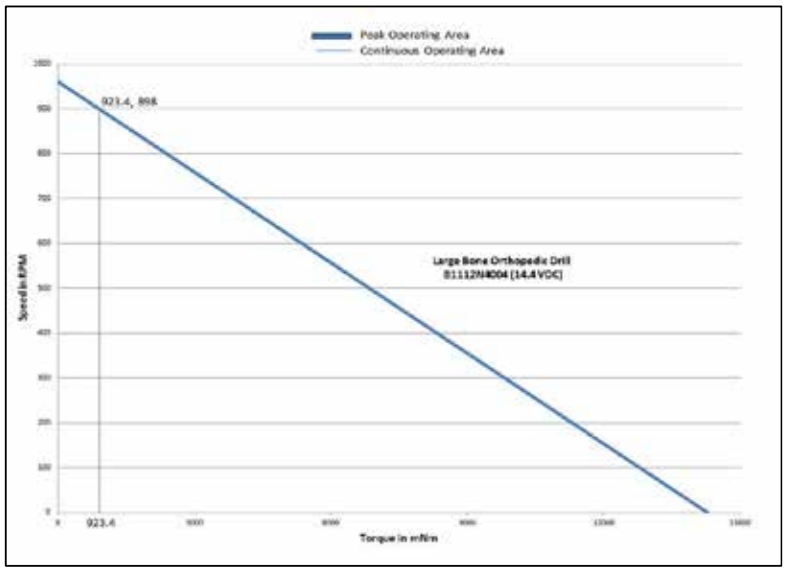


V121616

# Brush DC Motors

Featuring a permanent magnet, coreless design, our brush DC motors deliver high efficiency and power density in a small, lightweight package. Built of high-quality materials for optimal performance, these motors offer a low moment of inertia, low friction and a long commutator life. They're perfect for compact applications requiring high acceleration, torque and efficiency, with no cogging.

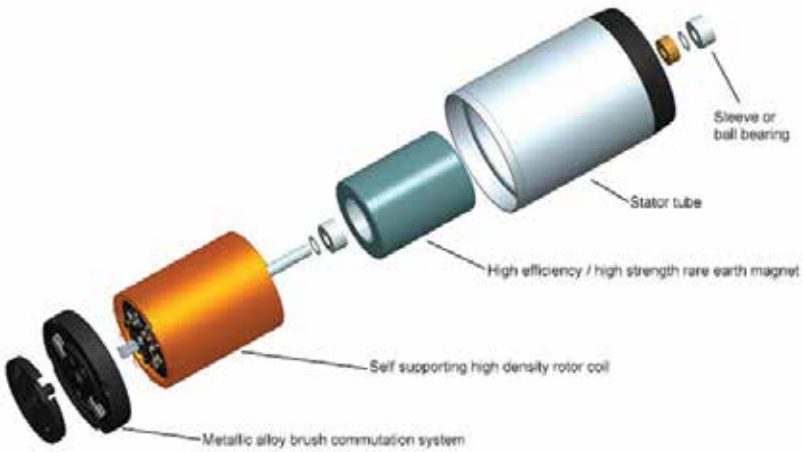


## Compact, Efficient, Versatile Performance

| Feature | Details | Application Advantages |
|---|---|---|
| **Ultra-compact design** | • Exceptional power density<br>• High torque-to-volume ratio<br>• Lightweight<br>• Excellent heat dissipation | • Greater design flexibility<br>• User comfort and convenience in handheld applications |
| **Coreless rotor** | • Ironless, self-supporting coil<br>• Minimal air gaps<br>• No inactive coil heads | • High acceleration, low moment of inertia<br>• Low friction, low starting voltage<br>• No cogging<br>• No iron losses |
| **Precious metal commutation system** | • Low contact resistance, low friction<br>• Available with REE coils | • Low no-load current, low starting voltage<br>• Reduced electro erosion for longer brush lifetime |
| **Graphite-copper commutation** | • High current carrying capacity<br>• Available with REE coils | • Perfect for boost in start-stop applications or incremental motions<br>• Reduced electro erosion for longer brush lifetime |
| **Neodymium permanent magnet** | • High magnetic flux<br>• Exceptional resistance to demagnetization | • High power and efficiency in a small, lightweight package<br>• Linear speed-torque curve<br>• Consistent power density over the motor lifetime |
| **Alnico permanent magnet** | • Medium magnetic flux | • Low magnetic flux leakage<br>• Cost-effective<br>• Linear speed-torque curve<br>• Consistent power density over the motor lifetime |

## Ideal for Small, Portable and Handheld Devices

### Medical devices & clinical diagnostics
- Laboratory automation
- Infusion systems
- Insulin pumps
- Diagnostic analyzers
- Miniature pumps

### Instrumentation
- Dosing & dispensing systems
- Gas detection
- Land surveying
- Microscopes
- Explosive trace detection systems

### Automation
- Humanoid robots

### Other
- Power hand tools
- Rotary tattoo machines
- Valve actuation

## Meet your Application's Working Point Requirements

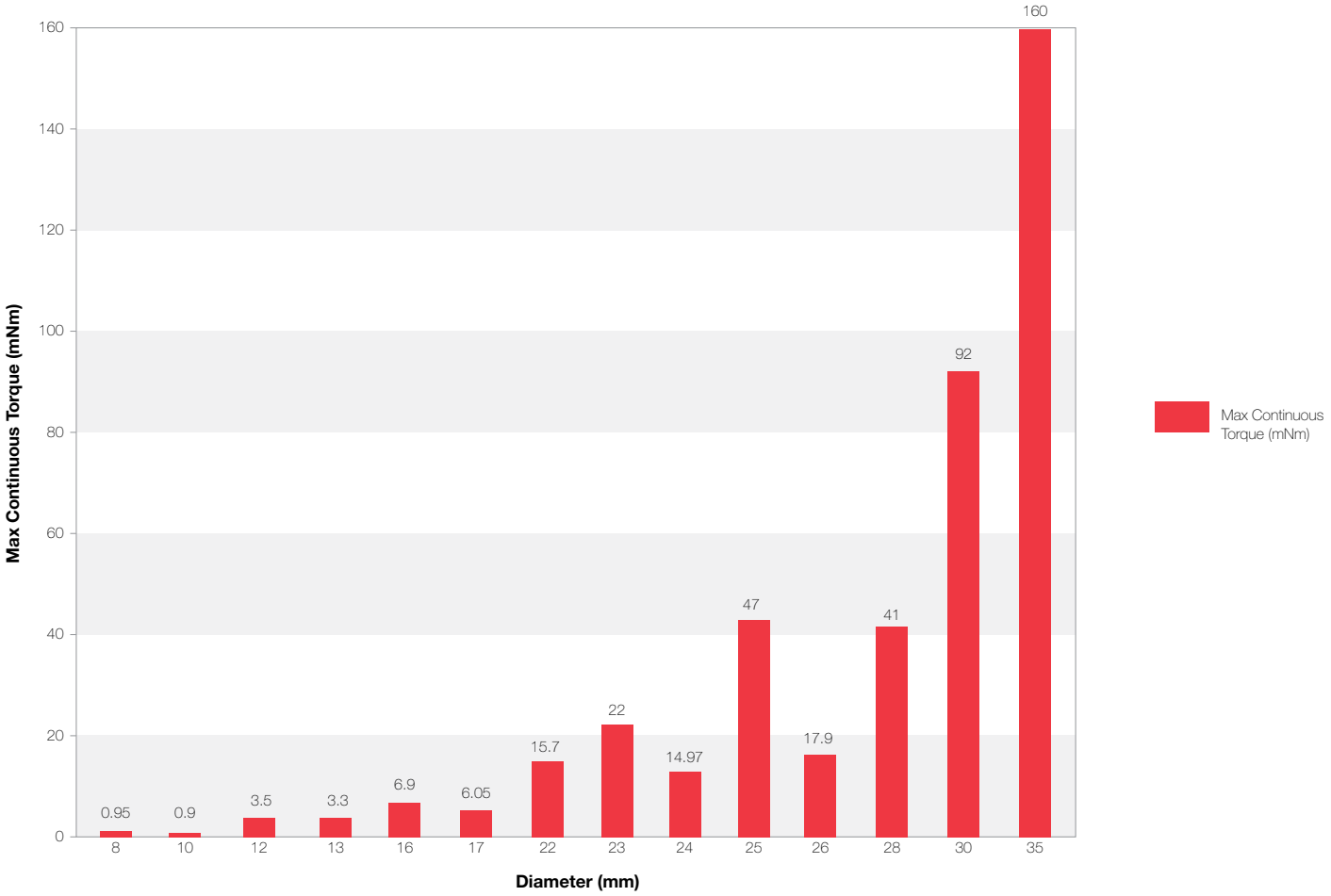


For complete product and application details, visit **portescap.com/brush-dc**

## 08GS61 Precious metal commutation Ø8mm 0.65 mNm

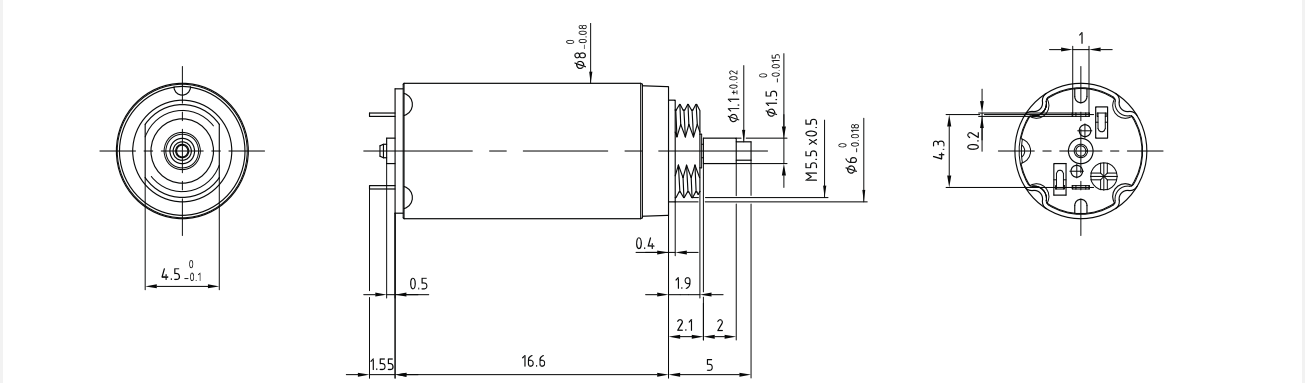


Dimensions in mm

### 08GS61 ****.3

| Electrical Data | **** | 107 | 105 | 105C | |
|---|---|---|---|---|---|
| 1 Nominal Voltage | V | 2 | 4.5 | 6 | Volt |
| 2 No-Load Speed | $n_0$ | 7,000 | 10,670 | 11,000 | rpm |
| 3 No-Load Current | $I_0$ | 6.0 | 4.0 | 3.0 | mA |
| 4 Terminal Resistance | R | 12.6 | 30.0 | 45.8 | Ω |
| 5 Output Power | $P_{2max.}$ | 0.5 | 0.5 | 0.5 | W |
| 6 Stall Torque | mNm | 0.42 (0.06) | 0.59 (0.09) | 0.64 (0.1) | mNm (oz-in) |
| 7 Efficiency | $h_{max.}$ | 65 | 70 | 72 | % |
| 8 Max Continuous Speed | $n_{e\ max.}$ | 10,000 | 10,000 | 10,000 | rpm |
| 9 Max Continuous Torque | $M_{e\ max.}$ | 0.64 (0.1) | 0.64 (0.1) | 0.66 (0.1) | mNm (oz-in) |
| 10 Max Continuous Current | $I_{e\ max.}$ | 0.25 | 0.17 | 0.13 | A |
| 11 Back-EMF Constant | $k_E$ | 0.28 | 0.41 | 0.53 | mV/rpm |
| 12 Torque Constant | $k_M$ | 2.63 | 3.92 | 5.10 | mNm/A |
| 13 Motor Regulation | $R/k^2$ | 1,820.0 | 1,950.0 | 1,760.0 | $10^3$/Nms |
| 14 Friction Torque | $T_F$ | 0.02 (0.01) | 0.02 (0.01) | 0.02 (0.01) | mNm (oz-in) |
| 15 Rotor Inductance | L | 0.06 | 0.11 | 0.20 | mH |
| 16 Mechanical Time Constant | $t_m$ | 5.5 | 5.9 | 5.3 | ms |
| 17 Rotor Inertia | J | 0.03 | 0.03 | 0.03 | $g.cm^2$ |
| **General Data** | | | | | |
| 18 Thermal Resistance (rotor/body) | $R_{th1}$ / $R_{th2}$ | | 20/100 | | °C/W |
| 19 Thermal Time Constant (rotor/stator) | $t_{w1}/t_{w2}$ | | 5/100 | | S |
| 20 Operating Temperature Range: | motor | | -30°C to 85°C (-22°F to 185°F) | | °C (°F) |
| | rotor | | 100°C (212°F) | | °C (°F) |
| 21 Shaft Load Max.: | | | With sleeve bearings | | |
| (2 mm from bearing) | -radial | | 0.5 (1.8) | | N (oz) |
| | -axial | | 30 (107.9) | | N (oz) |
| 22 Shaft Play: | -radial | | <0.015 (0.0006) | | mm (inch) |
| | -axial | | 0.100 (0.0039) | | mm (inch) |
| 23 Weight | g | | 3.8 (0.14) | | g (oz) |

| Execution Table | |
|---|---|
| Gearbox | Single Shaft |
| R10 | 7 |
| R08 | Upon Request |

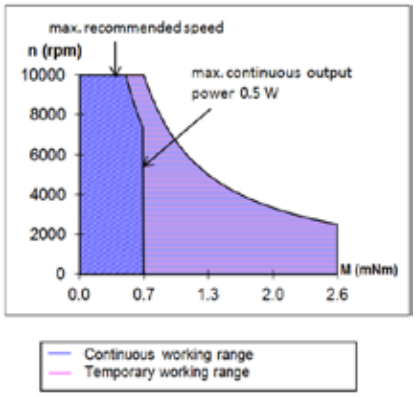


V121616

## 08G61 Precious metal commutation Ø8mm 0.95 mNm

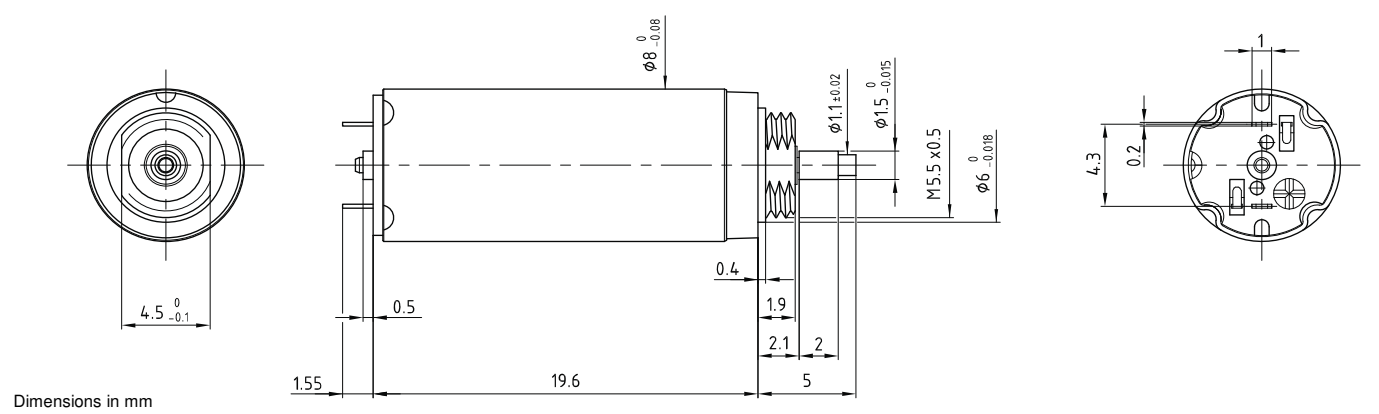


### 08G61 **** .3

| Electrical Data | **** | 107 | 205C | |
|---|---|---|---|---|
| 1 Nominal Voltage | V | 3 | 9 | Volt |
| 2 No-Load Speed | $n_0$ | 9,780 | 11,760 | rpm |
| 3 No-Load Current | $I_0$ | 6.0 | 2.5 | mA |
| 4 Terminal Resistance | R | 11.8 | 54.0 | Ω |
| 5 Output Power | $P_{2max.}$ | 0.6 | 0.7 | W |
| 6 Stall Torque | mNm | 0.73 (0.11) | 1.2 (0.17) | mNm (oz-in) |
| 7 Efficiency | $h_{max.}$ | 72 | 77 | % |
| 8 Max Continuous Speed | $n_{e\ max.}$ | 10,000 | 10,000 | rpm |
| 9 Max Continuous Torque | $M_{e\ max.}$ | 0.8 (0.14) | 0.95 (0.14) | mNm (oz-in) |
| 10 Max Continuous Current | $I_{e\ max.}$ | 0.29 | 0.13 | A |
| 11 Back-EMF Constant | $k_E$ | 0.30 | 0.75 | mV/rpm |
| 12 Torque Constant | $k_M$ | 2.86 | 7.20 | mNm/A |
| 13 Motor Regulation | $R/k^2$ | 1,440.0 | 1,040.0 | $10^3$/Nms |
| 14 Friction Torque | $T_F$ | 0.02 (0.01) | 0.02 (0.01) | mNm (oz-in) |
| 15 Rotor Inductance | L | 0.03 | 0.16 | mH |
| 16 Mechanical Time Constant | $t_m$ | 5.0 | 3.6 | ms |
| 17 Rotor Inertia | J | 0.04 | 0.04 | $g.cm^2$ |
| **General Data** | | | | |
| 18 Thermal Resistance (rotor/body) | $R_{th1}$ / $R_{th2}$ | 18/85 | | °C/W |
| 19 Thermal Time Constant (rotor/stator) | $t_{w1}/t_{w2}$ | 5/100 | | S |
| 20 Operating Temperature Range: | motor | -30°C to 85°C (-22°F to 185°F) | | °C (°F) |
| | rotor | 100°C (212°F) | | °C (°F) |
| 21 Shaft Load Max.: | | With sleeve bearings | | |
| (2 mm from bearing) | -radial | 0.5 (1.8) | | N (oz) |
| | -axial | 30 (107.9) | | N (oz) |
| 22 Shaft Play: | -radial | <0.015 (0.0006) | | mm (inch) |
| | -axial | 0.100 (0.0039) | | mm (inch) |
| 23 Weight | g | 4.6 (0.17) | | g (oz) |

| Execution Table | |
|---|---|
| Gearbox | Single Shaft |
| R10 | 5 |
| MR2 | Upon Request |

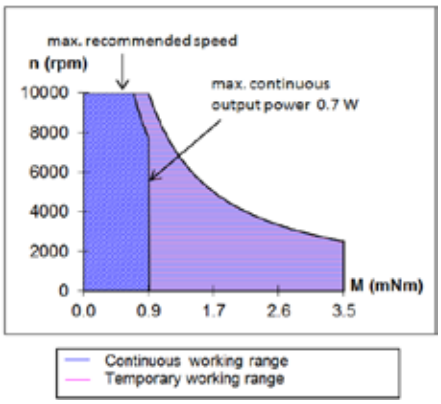


V121616

## 10NS61 Athlonix™ Precious metal commutation Ø10mm 0.9 mNm

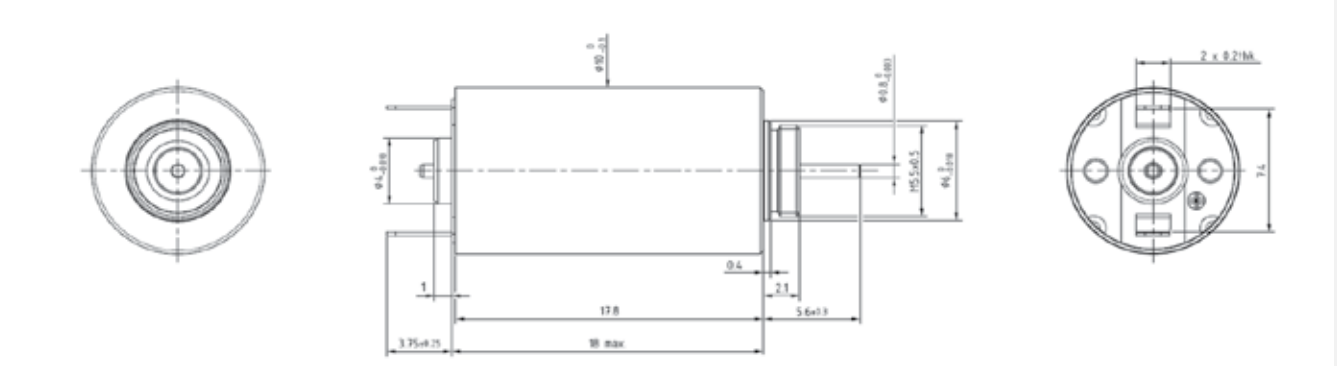

Dimensions in mm

**10NS61 **** .5**

| Electrical Data | **** | 107C | 105C | 104C | |
|---|---|---|---|---|---|
| 1 Nominal Voltage | V | 3 | 6 | 9 | Volt |
| 2 No-Load Speed | $n_0$ | 10,100 | 10,400 | 10,700 | rpm |
| 3 No-Load Current | $I_0$ | 11.0 | 4.2 | 3.6 | mA |
| 4 Terminal Resistance | R | 10.8 | 43.0 | 98.0 | Ω |
| 5 Output Power | $P_{2max.}$ | 0.7 | 0.7 | 0.7 | W |
| 6 Stall Torque | mNm | 0.76 (0.11) | 0.75 (0.11) | 0.71 (0.1) | mNm (oz-in) |
| 7 Efficiency | $h_{max.}$ | 64 | 68 | 64 | % |
| 8 Max Continuous Speed | $n_{e\ max.}$ | 10,000 | 10,000 | 10,000 | rpm |
| 9 Max Continuous Torque | $M_{e\ max.}$ | 0.9 (0.13) | 0.9 (0.13) | 0.85 (0.13) | mNm (oz-in) |
| 10 Max Continuous Current | $I_{e\ max.}$ | 0.34 | 0.17 | 0.12 | A |
| 11 Back-EMF Constant | $k_E$ | 0.29 | 0.57 | 0.81 | mV/rpm |
| 12 Torque Constant | $k_M$ | 2.72 | 5.40 | 7.70 | mNm/A |
| 13 Motor Regulation | $R/k^2$ | 1,500.0 | 1,500.0 | 1,600.0 | $10^3$/Nms |
| 14 Friction Torque | $T_F$ | 0.02 (0.01) | 0.02 (0.01) | 0.02 (0.01) | mNm (oz-in) |
| 15 Rotor Inductance | L | 0.01 | 0.02 | 0.03 | mH |
| 16 Mechanical Time Constant | $t_m$ | 7.3 | 7.3 | 8.1 | ms |
| 17 Rotor Inertia | J | 0.05 | 0.05 | 0.05 | $g.cm^2$ |
| **General Data** | | | | | |
| 18 Thermal Resistance (rotor/body) | $R_{th1}$ / $R_{th2}$ | | 23/48 | | °C/W |
| 19 Thermal Time Constant (rotor/stator) | $t_{w1}/t_{w2}$ | | 5/150 | | S |
| 20 Operating Temperature Range: | motor | | -30°C to 85°C (-22°F to 185°F) | | °C (°F) |
| | rotor | | 100°C (212°F) | | °C (°F) |
| 21 Shaft Load Max.: | | | With sleeve bearings | | |
| (2 mm from bearing) | -radial | | 0.5 (1.8) | | N (oz) |
| | -axial | | 30 (107.9) | | N (oz) |
| 22 Shaft Play: | -radial | | <0.015 (0.0006) | | mm (inch) |
| | -axial | | 0.100 (0.0039) | | mm (inch) |
| 23 Weight | g | | 16 (0.57) | | g (oz) |

| Execution | |
|---|---|
| Gearbox | Single Shaft |
| R10 | 3 |

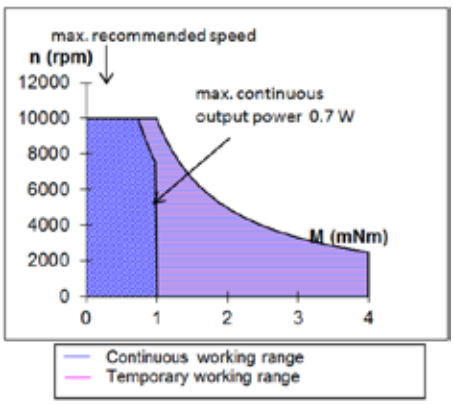


V121616

## 12GS88 Athlonix™ Precious metal commutation Ø12mm 1.5 mNm

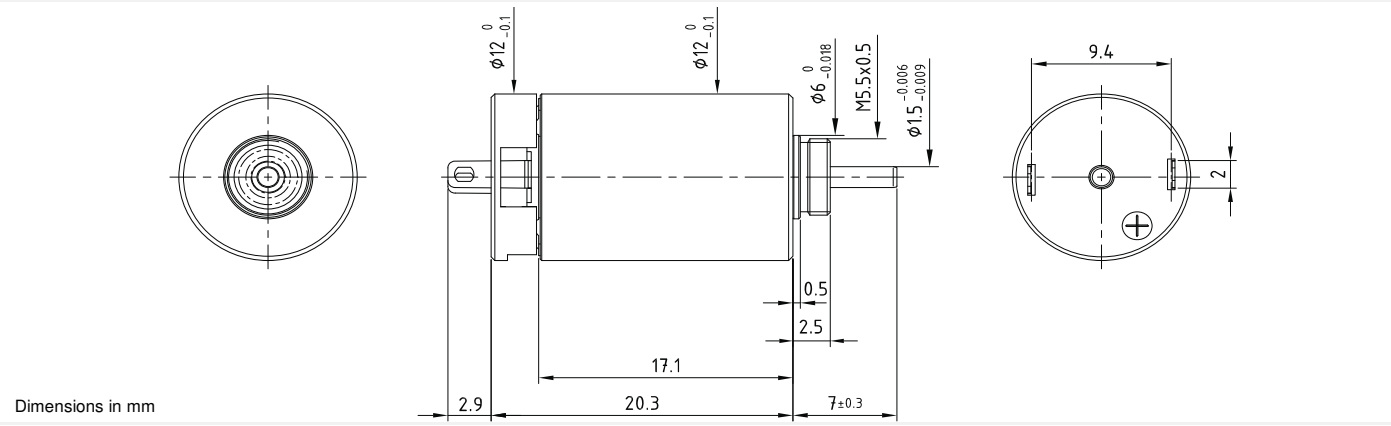


### 12GS88 **** .1007

| Electrical Data | **** | 210E | 208F | |
|---|---|---|---|---|
| 1 Nominal Voltage | V | 3 | 6 | Volt |
| 2 No-Load Speed | $n_0$ | 7,280 | 9,000 | rpm |
| 3 No-Load Current | $I_0$ | 14.0 | 12.0 | mA |
| 4 Terminal Resistance | R | 7.4 | 20.6 | Ω |
| 5 Output Power | $P_{2max.}$ | 1.2 | 1.1 | W |
| 6 Stall Torque | mNm | 1.54 (0.22) | 1.78 (0.26) | mNm (oz-in) |
| 7 Efficiency | $h_{max.}$ | 66 | 64 | % |
| 8 Max Continuous Speed | $n_{e\ max.}$ | 10,000 | 10,000 | rpm |
| 9 Max Continuous Torque | $M_{e\ max.}$ | 1.51 (0.21) | 1.45 (0.21) | mNm (oz-in) |
| 10 Max Continuous Current | $I_{e\ max.}$ | 0.41 | 0.25 | A |
| 11 Back-EMF Constant | $k_E$ | 0.40 | 0.64 | mV/rpm |
| 12 Torque Constant | $k_M$ | 3.80 | 6.10 | mNm/A |
| 13 Motor Regulation | $R/k^2$ | 512.0 | 550.0 | $10^3$/Nms |
| 14 Friction Torque | $T_F$ | 0.07 (0.01) | 0.07 (0.01) | mNm (oz-in) |
| 15 Rotor Inductance | L | 0.09 | 0.25 | mH |
| 16 Mechanical Time Constant | $t_m$ | 9.7 | 12.0 | ms |
| 17 Rotor Inertia | J | 0.19 | 0.21 | $g.cm^2$ |
| **General Data** | | | | |
| 18 Thermal Resistance (rotor/body) | $R_{th1}$ / $R_{th2}$ | 14/66 | | °C/W |
| 19 Thermal Time Constant (rotor/stator) | $t_{w1}/t_{w2}$ | 5/150 | | S |
| 20 Operating Temperature Range: | motor | -30°C to 85°C (-22°F to 185°F) | | °C (°F) |
| | rotor | 100°C (212°F) | | °C (°F) |
| 21 Shaft Load Max.: | | With sleeve bearings | | |
| (5mm from bearing) | -radial | 1.5 (5.4) | | N (oz) |
| | -axial | 150 (539.5) | | N (oz) |
| 22 Shaft Play: | -radial | <0.03 (0.0012) | | mm (inch) |
| | -axial | 0.15 (0.0059) | | mm (inch) |
| 23 Weight | g | 13.5 (0.48) | | g (oz) |

| Execution Table | | |
|---|---|---|
| Gearbox | Single Shaft | MR2 |
| R10 | Upon Request | Upon Request |
| R13 | Upon Request | Upon Request |

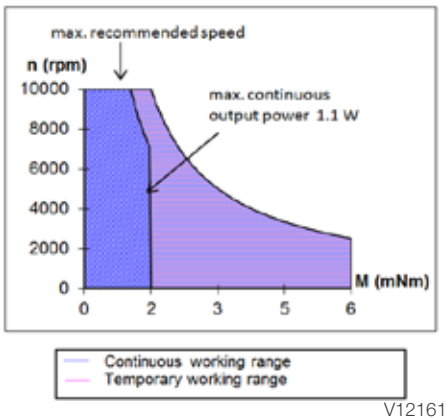


V121616

## 12G88 Athlonix™ Precious metal commutation Ø12mm 3.5 mNm

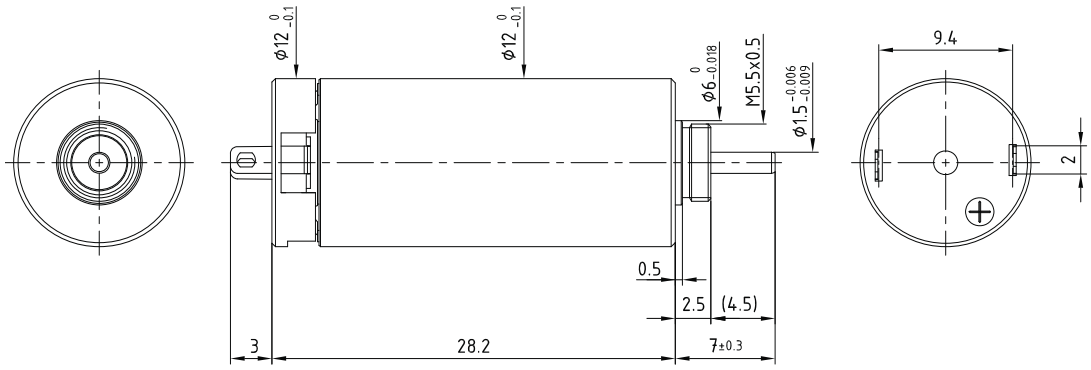


Dimensions in mm

### 12G88 **** .1001

| Electrical Data | **** | 215E | 210E | |
|---|---|---|---|---|
| 1 Nominal Voltage | V | 4.5 | 9 | Volt |
| 2 No-Load Speed | $n_0$ | 8,670 | 9,900 | rpm |
| 3 No-Load Current | $I_0$ | 16.0 | 9.0 | mA |
| 4 Terminal Resistance | R | 3.2 | 12.3 | Ω |
| 5 Output Power | $P_{2max.}$ | 2.7 | 2.4 | W |
| 6 Stall Torque | mNm | 6.8 (0.97) | 6.3 (0.9) | mNm (oz-in) |
| 7 Efficiency | $h_{max.}$ | 80 | 79 | % |
| 8 Max Continuous Speed | $n_{e\ max.}$ | 10,000 | 10,000 | rpm |
| 9 Max Continuous Torque | $M_{e\ max.}$ | 3.5 (0.44) | 3.1 (0.44) | mNm (oz-in) |
| 10 Max Continuous Current | $I_{e\ max.}$ | 0.73 | 0.37 | A |
| 11 Back-EMF Constant | $k_E$ | 0.51 | 0.90 | mV/rpm |
| 12 Torque Constant | $k_M$ | 4.90 | 8.60 | mNm/A |
| 13 Motor Regulation | $R/k^2$ | 130.0 | 170.0 | $10^3$/Nms |
| 14 Friction Torque | $T_F$ | 0.08 (0.02) | 0.08 (0.02) | mNm (oz-in) |
| 15 Rotor Inductance | L | 0.08 | 0.25 | mH |
| 16 Mechanical Time Constant | $t_m$ | 3.8 | 4.3 | ms |
| 17 Rotor Inertia | J | 0.29 | 0.26 | $g.cm^2$ |
| **General Data** | | | | |
| 18 Thermal Resistance (rotor/body) | $R_{th1}$ / $R_{th2}$ | 10/50 | | °C/W |
| 19 Thermal Time Constant (rotor/stator) | $t_{w1}/t_{w2}$ | 6/300 | | S |
| 20 Operating Temperature Range: | motor | -30°C to 85°C (-22°F to 185°F) | | °C (°F) |
| | rotor | 100°C (212°F) | | °C (°F) |
| 21 Shaft Load Max.: | | With sleeve bearings | | |
| (5mm from bearing) | -radial | 1.5 (5.4) | | N (oz) |
| | -axial | 150 (539.5) | | N (oz) |
| 22 Shaft Play: | -radial | <0.015 (0.0006) | | mm (inch) |
| | -axial | 0.300 (0.012) | | mm (inch) |
| 23 Weight | g | 15 (0.53) | | g (oz) |

| Execution Table | | |
|---|---|---|
| Gearbox | Single Shaft | MR2 |
| R10 | 1003 | 1005 |
| R13 | 1002 | 1004 |

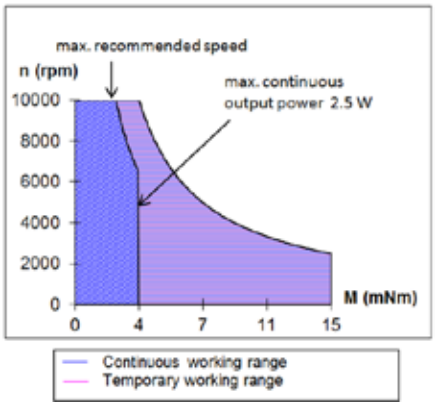


V121616

## 13N88 Precious metal commutation Ø13mm 3.3 mNm

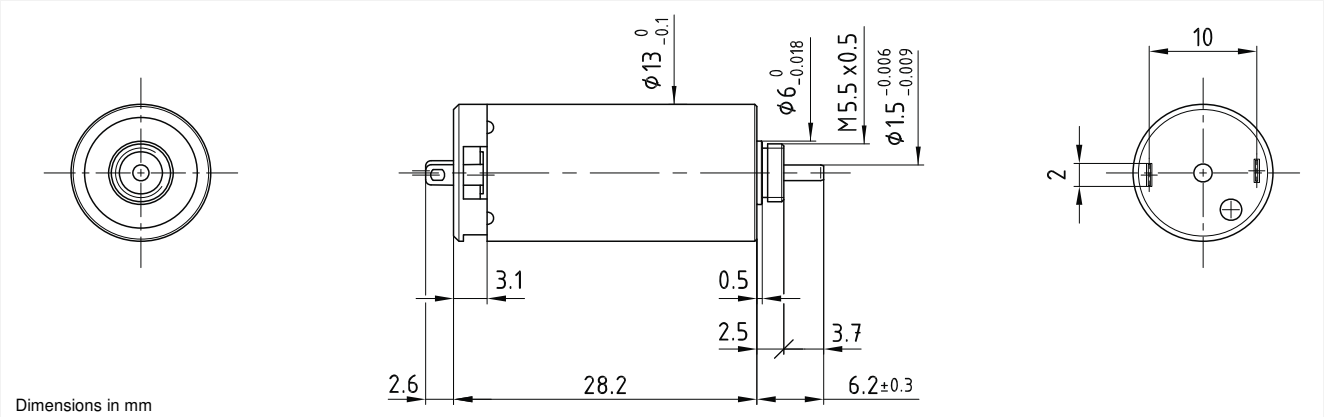


### 13N88 **** .1

| Electrical Data | **** | 213E | 110 | 107 | |
|---|---|---|---|---|---|
| 1 Nominal Voltage | V | 6 | 12 | 24 | Volt |
| 2 No-Load Speed | $n_0$ | 12,290 | 12,400 | 14,150 | rpm |
| 3 No-Load Current | $I_0$ | 25.6 | 13.6 | 8.8 | mA |
| 4 Terminal Resistance | R | 4.2 | 13.7 | 47.4 | Ω |
| 5 Output Power | $P_{2max.}$ | 2.4 | 2.6 | 2.5 | W |
| 6 Stall Torque | mNm | 6.5 (0.93) | 8 (1.14) | 8.2 (1.17) | mNm (oz-in) |
| 7 Efficiency | $h_{max.}$ | 75 | 77 | 75 | % |
| 8 Max Continuous Speed | $n_{e\ max.}$ | 9,000 | 9,000 | 9,000 | rpm |
| 9 Max Continuous Torque | $M_{e\ max.}$ | 3 (0.47) | 3.3 (0.47) | 3.2 (0.46) | mNm (oz-in) |
| 10 Max Continuous Current | $I_{e\ max.}$ | 0.69 | 0.38 | 0.21 | A |
| 11 Back-EMF Constant | $k_E$ | 0.48 | 0.95 | 1.67 | mV/rpm |
| 12 Torque Constant | $k_M$ | 4.58 | 9.10 | 15.90 | mNm/A |
| 13 Motor Regulation | $R/k^2$ | 200.0 | 165.0 | 185.0 | $10^3$/Nms |
| 14 Friction Torque | $T_F$ | 0.12 (0.02) | 0.12 (0.02) | 0.14 (0.02) | mNm (oz-in) |
| 15 Rotor Inductance | L | 0.07 | 0.25 | 0.80 | mH |
| 16 Mechanical Time Constant | $t_m$ | 5.6 | 5.5 | 5.3 | ms |
| 17 Rotor Inertia | J | 0.28 | 0.33 | 0.29 | $g.cm^2$ |
| **General Data** | | | | | |
| 18 Thermal Resistance (rotor/body) | $R_{th1}$ / $R_{th2}$ | | 10/40 | | °C/W |
| 19 Thermal Time Constant (rotor/stator) | $t_{w1}/t_{w2}$ | | 6/300 | | S |
| 20 Operating Temperature Range: | motor | | -30°C to 85°C (-22°F to 185°F) | | °C (°F) |
| | rotor | | 100°C (212°F) | | °C (°F) |
| 21 Shaft Load Max.: | | | With sleeve bearings | | |
| (5mm from bearing) | -radial | | 1.5 (5.4) | | N (oz) |
| | -axial | | 150 (539.5) | | N (oz) |
| 22 Shaft Play: | -radial | | <0.03 (0.0012) | | mm (inch) |
| | -axial | | 0.15 (0.0059) | | mm (inch) |
| 23 Weight | g | | 18 (0.64) | | g (oz) |

**Execution Table**

| Gearbox | 13N88 | 13N88D12 | MR2 |
|---|---|---|---|
| R13 | 1 | 3 | Upon Request |
| R16 | Upon Request | Upon Request | Upon Request |

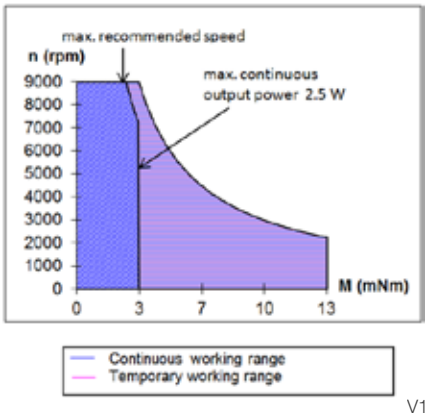


V121616

## 16C18 Precious metal commutation Ø16mm 1.12 mNm

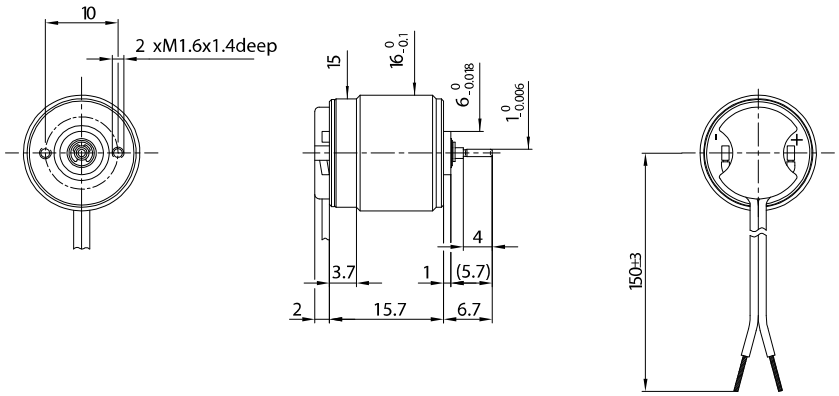


Dimensions in mm

**16C18 **** .67**

| Electrical Data | **** | 115 | 210 | 207 | 205 | 204 | |
|---|---|---|---|---|---|---|---|
| 1 Nominal Voltage | V | 1.5 | 4 | 6 | 12 | 15 | Volt |
| 2 No-Load Speed | $n_0$ | 15,300 | 14,700 | 15,700 | 16,200 | 16,000 | rpm |
| 3 No-Load Current | $I_0$ | 74.8 | 23.0 | 18.4 | 10.4 | 6.9 | mA |
| 4 Terminal Resistance | R | 1.2 | 7.5 | 18.0 | 65.0 | 162.0 | Ω |
| 5 Output Power | $P_{2max.}$ | 0.7 | 0.8 | 0.7 | 0.8 | 0.7 | W |
| 6 Stall Torque | mNm | 1.1 | 1.3 | 1.1 | 1.2 | 0.8 | mNm (oz-in) |
| 7 Efficiency | $h_{max.}$ | 57 | 63 | 59 | 58 | 53 | % |
| 8 Max Continuous Speed | $n_{e\ max.}$ | 10,000 | 10,000 | 10,000 | 10,000 | 10,000 | rpm |
| 9 Max Continuous Torque | $M_{e\ max.}$ | 0.98 (0.15) | 1.12 (0.15) | 1 (0.15) | 1 (0.14) | 0.79 (0.11) | mNm (oz-in) |
| 10 Max Continuous Current | $I_{e\ max.}$ | 1.19 | 0.48 | 0.31 | 0.16 | 0.10 | A |
| 11 Back-EMF Constant | $k_E$ | 0.09 | 0.26 | 0.36 | 0.70 | 0.87 | mV/rpm |
| 12 Torque Constant | $k_M$ | 0.88 | 2.48 | 3.44 | 6.68 | 8.30 | mNm/A |
| 13 Motor Regulation | $R/k^2$ | 1555.0 | 1220.0 | 1520.0 | 1460.00 | 2350.00 | $10^3$/Nms |
| 14 Friction Torque | $T_F$ | 0.07 (0.02) | 0.06 (0.01) | 0.06 (0.01) | 0.07 (0.02) | 0.06 (0.01) | mNm (oz-in) |
| 15 Rotor Inductance | L | 20.00 | 150.00 | 250.00 | 1000.00 | 1000.00 | mH |
| 16 Mechanical Time Constant | $t_m$ | 48.0 | 50.0 | 41.0 | 60.0 | 63.0 | ms |
| 17 Rotor Inertia | J | 0.31 | 0.41 | 0.27 | 0.41 | 0.27 | $g.cm^2$ |
| **General Data** | | | | | | | |
| 18 Thermal Resistance (rotor/body) | $R_{th1}$ / $R_{th2}$ | 15/40 | | | | | ℃/W |
| 19 Thermal Time Constant (rotor/stator) | $t_{w1}/t_{w2}$ | 4/230 | | | | | S |
| 20 Operating Temperature Range: | motor | -30℃ to 85℃ (-22℉ to 185℉) | | | | | ℃ (℉) |
| | rotor | 100℃ (212℉) | | | | | ℃ (℉) |
| 21 Shaft Load Max.: | | With sleeve bearings | | | | | |
| (5mm from bearing) | -radial | 1.5 (5.4) | | | | | N (oz) |
| | -axial | 100 (359.6) | | | | | N (oz) |
| 22 Shaft Play: | -radial | <0.03 (0.0012) | | | | | mm (inch) |
| | -axial | 0.15 (0.0059) | | | | | mm (inch) |
| 23 Weight | g | 14 (0.49) | | | | | g (oz) |

| Execution Table | | |
|---|---|---|
| Gearbox | Single Shaft | F16 |
| B16 | 67 | 76 |
| BA16 | 67 | 76 |
| R16 | 67 | 76 |

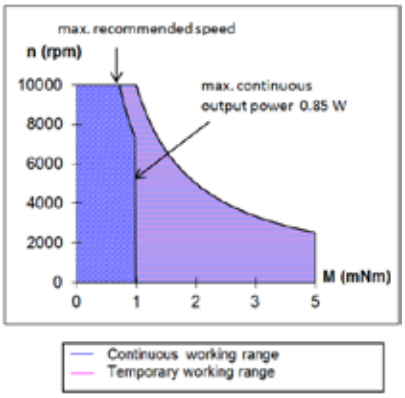


V121616

## 16DCP Athlonix™ Graphite-Copper commutation Ø16mm 2.42 mNm

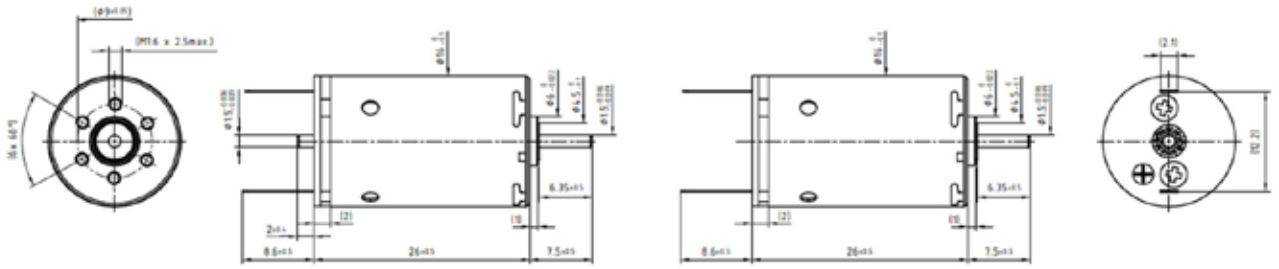

Dimensions in mm

### 16DCP 26G1/G2 **** .*

| Electrical Data | **** | 211P | 208P | 209E | 205P | |
|---|---|---|---|---|---|---|
| 1 Nominal Voltage | V | 3 | 6 | 9 | 12 | Volt |
| 2 No-Load Speed | $n_0$ | 7210 | 7543 | 7358 | 7179 | rpm |
| 3 No-Load Current | $I_0$ | 77.2 | 40.1 | 26.3 | 19.1 | mA |
| 4 Terminal Resistance | R | 3.4 | 12.2 | 30.8 | 51.5 | Ω |
| 5 Output Power | $P_{2max.}$ | 1.2 | 1.2 | 1.2 | 1.3 | W |
| 6 Stall Torque | mNm | 2.94 (0.42) | 3.16 (0.45) | 2.82 (0.4) | 3.13 (0.45) | mNm (oz-in) |
| 7 Efficiency | $\eta_{max.}$ | 50 | 51 | 49 | 51 | % |
| 8 Max Continuous Speed | $n_{e\ max.}$ | 10000 | 10000 | 10000 | 10000 | rpm |
| 9 Max Continuous Torque | $M_{e\ max.}$ | 2.33 (0.33) | 2.36 (0.34) | 2.25 (0.32) | 2.42 (0.35) | mNm (oz-in) |
| 10 Max Continuous Current | $I_{e\ max.}$ | 0.72 | 0.38 | 0.24 | 0.18 | A |
| 11 Back-EMF Constant | $k_E$ | 0.38 | 0.73 | 1.11 | 1.53 | mV/rpm |
| 12 Torque Constant | $k_M$ | 3.63 | 6.98 | 10.63 | 14.65 | mNm/A |
| 13 Motor Regulation | $R/k^2$ | 256.16 | 249.71 | 272.91 | 239.61 | $10^3$/Nms |
| 14 Friction Torque | $T_F$ | 0.25 (0.035) | 0.25 (0.035) | 0.25 (0.035) | 0.25 (0.035) | mNm (oz-in) |
| 15 Mechanical Time Constant | $\tau_m$ | 26.42 | 25.27 | 28.31 | 24.95 | ms |
| 16 Rotor Inertia | J | 1.03 | 1.01 | 1.04 | 1.04 | $g.cm^2$ |
| **General Data** | | | | | | |
| 17 Thermal Resistance (rotor/body) | $R_{th1}$ / $R_{th2}$ | 7/35 | | | | °C/W |
| 18 Thermal Time Constant (rotor/stator) | $t_{w1}/t_{w2}$ | 6/380 | | | | S |
| 19 Operating Temperature Range: | $t_{w1}/t_{w2}$ | -30°C to 85°C (-22°F to 185°F) | | | | °C (°F) |
| | rotor | 100°C (212°F) | | | | °C (°F) |
| 20 Shaft Load Max.: | | With sleeve bearings | | | | |
| (5mm from bearing) | -radial | 1.5 (5.39) | | | | N (oz) |
| | -axial | 100 (359.6) | | | | N (oz) |
| 21 Shaft Play: | -radial | 0.03 (0.0012) | | | | mm (inch) |
| | -axial | 0.15 (0.0059) | | | | mm (inch) |
| 22 Weight | g | 23 (0.82) | | | | g (oz) |

* Also available with ball bearing

| Execution Table | | | |
|---|---|---|---|
| Gearbox | Single Shaft | MR2 | M Sense B |
| R16 | 1 | 2 | Upon Request |
| B16 | 3 | 4 | Upon Request |
| BA16 | 3 | 4 | Upon Request |

Note:
G1:standard commutation
G2:special commutation for double shaft version

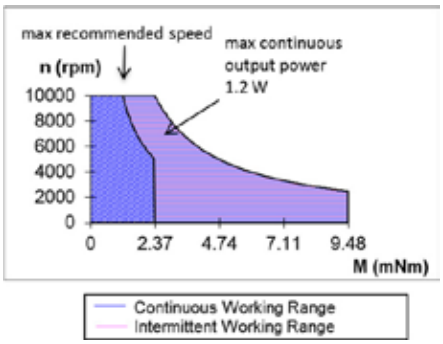


V121616

## 16DCP Athlonix™ Graphite-Copper commutation Ø16mm 2.42 mNm

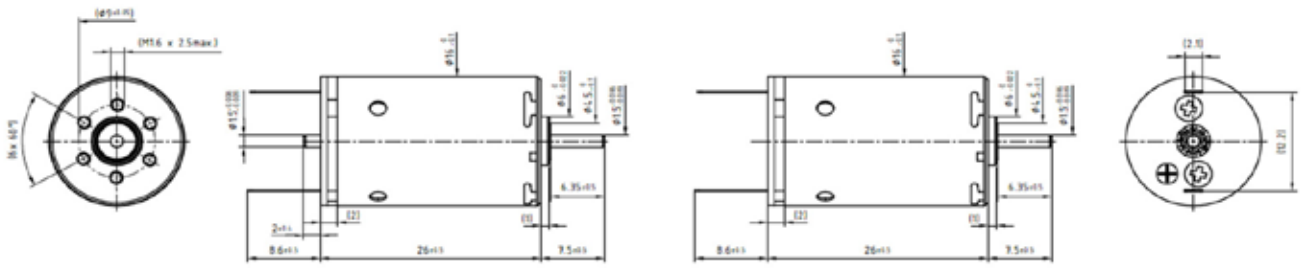

Dimensions in mm

### 16DCP 26G1/G2 **** .*

| Electrical Data | **** | 107P | 106P | 205E | |
|---|---|---|---|---|---|
| 1 Nominal Voltage | V | 18 | 21 | 24 | Volt |
| 2 No-Load Speed | $n_0$ | 9184 | 8684 | 7489 | rpm |
| 3 No-Load Current | $I_0$ | 16.0 | 13.2 | 10.0 | mA |
| 4 Terminal Resistance | R | 76.1 | 129.5 | 208.2 | Ω |
| 5 Output Power | $P_{2max.}$ | 1.2 | 1.1 | 1.2 | W |
| 6 Stall Torque | mNm | 3.84 (0.55) | 3.16 (0.45) | 2.94 (0.42) | mNm (oz-in) |
| 7 Efficiency | $\eta_{max.}$ | 55 | 51 | 50 | % |
| 8 Max Continuous Speed | $n_{e\ max.}$ | 10000 | 10000 | 10000 | rpm |
| 9 Max Continuous Torque | $M_{e\ max.}$ | 2.36 (0.34) | 2.18 (0.31) | 2.28 (0.33) | mNm (oz-in) |
| 10 Max Continuous Current | $I_{e\ max.}$ | 0.15 | 0.12 | 0.09 | A |
| 11 Back-EMF Constant | $k_E$ | 1.83 | 2.22 | 2.93 | mV/rpm |
| 12 Torque Constant | $k_M$ | 17.45 | 21.21 | 27.94 | mNm/A |
| 13 Motor Regulation | $R/k^2$ | 250.11 | 287.70 | 266.57 | $10^3$/Nms |
| 14 Friction Torque | $T_F$ | 0.25 (0.035) | 0.25 (0.035) | 0.25 (0.035) | mNm (oz-in) |
| 15 Mechanical Time Constant | $\tau_m$ | 24.92 | 24.89 | 28.15 | ms |
| 16 Rotor Inertia | J | 1.00 | 0.87 | 1.06 | $g.cm^2$ |
| **General Data** | | | | | |
| 17 Thermal Resistance (rotor/body) | $R_{th1}$ / $R_{th2}$ | | 7/35 | | °C/W |
| 18 Thermal Time Constant (rotor/stator) | $t_{w1}/t_{w2}$ | | 6/380 | | S |
| 19 Operating Temperature Range: | $t_{w1}/t_{w2}$ | | -30°C to 85°C (-22°F to 185°F) | | °C (°F) |
| | rotor | | 100°C (212°F) | | °C (°F) |
| 20 Shaft Load Max.: | | | With sleeve bearings | | |
| (5mm from bearing) | -radial | | 1.5 (5.39) | | N (oz) |
| | -axial | | 100 (359.6) | | N (oz) |
| 21 Shaft Play: | -radial | | 0.03 (0.0012) | | mm (inch) |
| | -axial | | 0.15 (0.0059) | | mm (inch) |
| 22 Weight | g | | 23 (0.82) | | g (oz) |
| * Also available with ball bearing | | | | | |

| Execution Table | | | |
|---|---|---|---|
| Gearbox | Single Shaft | MR2 | M Sense B |
| R16 | 1 | 2 | Upon Request |
| B16 | 3 | 4 | Upon Request |
| BA16 | 3 | 4 | Upon Request |

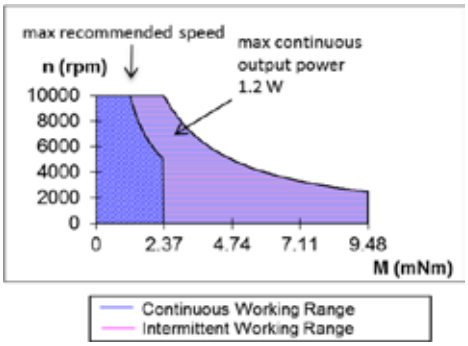


Note:
G1:standard commutation
G2:special commutation for double shaft version

V121616

## 16DCP Athlonix™ Precious metal commutation Ø16mm 2.63 mNm

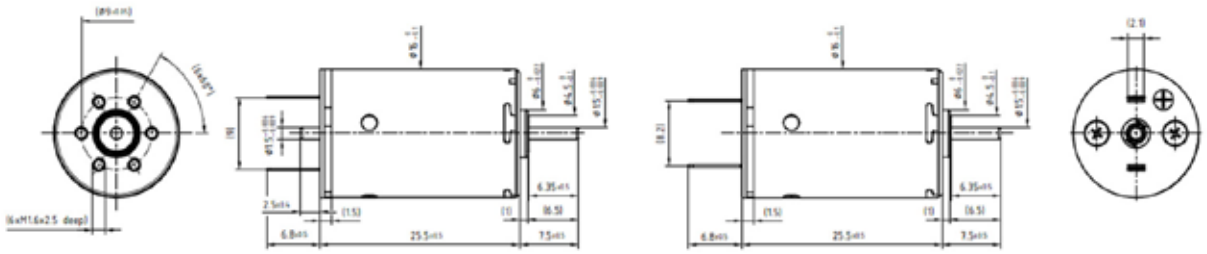

Dimensions in mm

### 16DCP 26P1/P2 **** .*

| Electrical Data | **** | 211P | 208P | 209E | 205P | |
|---|---|---|---|---|---|---|
| 1 Nominal Voltage | V | 3 | 6 | 9 | 12 | Volt |
| 2 No-Load Speed | $n_0$ | 7727 | 8044 | 7904 | 7658 | rpm |
| 3 No-Load Current | $I_0$ | 19.4 | 10.1 | 6.6 | 4.8 | mA |
| 4 Terminal Resistance | R | 3.3 | 12.1 | 30.7 | 51.4 | Ω |
| 5 Output Power | $P_{2max.}$ | 1.4 | 1.4 | 1.3 | 1.4 | W |
| 6 Stall Torque | mNm | 3.25 (0.47) | 3.4 (0.49) | 3.04 (0.44) | 3.35 (0.48) | mNm (oz-in) |
| 7 Efficiency | $\eta_{max.}$ | 73 | 74 | 72 | 73 | % |
| 8 Max Continuous Speed | $n_{e\ max.}$ | 10000 | 10000 | 10000 | 10000 | rpm |
| 9 Max Continuous Torque | $M_{e\ max.}$ | 2.58 (0.37) | 2.59 (0.37) | 2.46 (0.35) | 2.63 (0.38) | mNm (oz-in) |
| 10 Max Continuous Current | $I_{e\ max.}$ | 0.73 | 0.38 | 0.24 | 0.18 | A |
| 11 Back-EMF Constant | $k_E$ | 0.38 | 0.73 | 1.11 | 1.53 | mV/rpm |
| 12 Torque Constant | $k_M$ | 3.63 | 6.98 | 10.63 | 14.65 | mNm/A |
| 13 Motor Regulation | $R/k^2$ | 248.57 | 247.65 | 272.02 | 239.14 | $10^3$/Nms |
| 14 Friction Torque | $T_F$ | 0.063 (0.009) | 0.063 (0.009) | 0.063 (0.009) | 0.063 (0.009) | mNm (oz-in) |
| 15 Mechanical Time Constant | $\tau_m$ | 25.64 | 25.06 | 28.22 | 24.90 | ms |
| 16 Rotor Inertia | J | 1.03 | 1.01 | 1.04 | 1.04 | $g.cm^2$ |
| **General Data** | | | | | | |
| 17 Thermal Resistance (rotor/body) | $R_{th1}$ / $R_{th2}$ | 7/35 | | | | °C/W |
| 18 Thermal Time Constant (rotor/stator) | $t_{w1}/t_{w2}$ | 6/380 | | | | S |
| 19 Operating Temperature Range: | $t_{w1}/t_{w2}$ | -30°C to 85°C (-22°F to 185°F) | | | | °C (°F) |
| | rotor | 100°C (212°F) | | | | °C (°F) |
| 20 Shaft Load Max.: | | With sleeve bearings | | | | |
| (5mm from bearing) | -radial | 1.5 (5.39) | | | | N (oz) |
| | -axial | 100 (359.6) | | | | N (oz) |
| 21 Shaft Play: | -radial | 0.03 (0.0012) | | | | mm (inch) |
| | -axial | 0.15 (0.0059) | | | | mm (inch) |
| 22 Weight | g | 23 (0.82) | | | | g (oz) |

* Also available with ball bearing

| Execution Table | | | |
|---|---|---|---|
| Gearbox | Single Shaft | MR2 | M Sense B |
| R16 | 1 | 2 | Upon Request |
| B16 | 3 | 4 | Upon Request |
| BA16 | 3 | 4 | Upon Request |

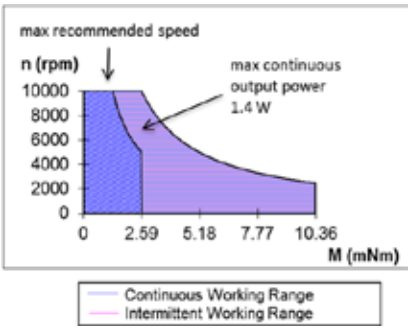


Note:
P1:standard commutation
P2:special commutation for double shaft version

V121616

## 16DCP Athlonix™ Precious metal commutation Ø16mm 2.63 mNm

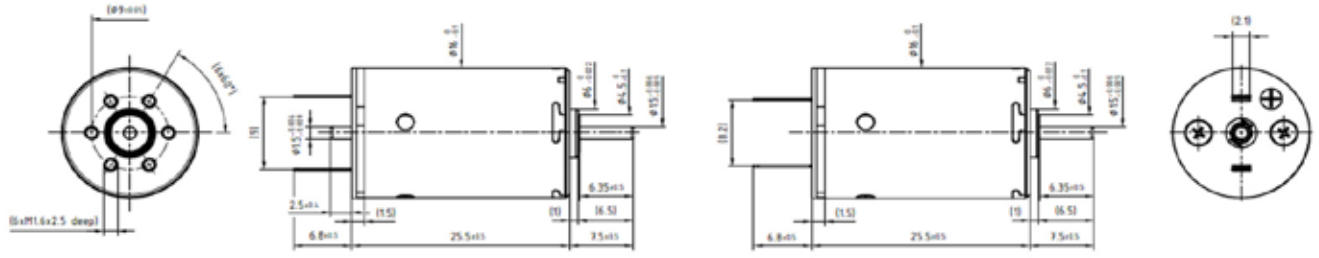

Dimensions in mm

### 16DCP 26P1/P2 **** .*

| Electrical Data | **** | 107P | 106P | 205E | |
|---|---|---|---|---|---|
| 1 Nominal Voltage | V | 18 | 21 | 24 | Volt |
| 2 No-Load Speed | $n_0$ | 9684 | 9259 | 8022 | rpm |
| 3 No-Load Current | $I_0$ | 4.0 | 3.3 | 2.5 | mA |
| 4 Terminal Resistance | R | 76.0 | 129.4 | 208.1 | Ω |
| 5 Output Power | $P_{2max.}$ | 1.4 | 1.3 | 1.3 | W |
| 6 Stall Torque | mNm | 4.06 (0.58) | 3.37 (0.48) | 3.15 (0.45) | mNm (oz-in) |
| 7 Efficiency | $\eta_{max.}$ | 76 | 73 | 73 | % |
| 8 Max Continuous Speed | $n_{e\ max.}$ | 10000 | 10000 | 10000 | rpm |
| 9 Max Continuous Torque | $M_{e\ max.}$ | 2.57 (0.37) | 2.39 (0.34) | 2.49 (0.36) | mNm (oz-in) |
| 10 Max Continuous Current | $I_{e\ max.}$ | 0.15 | 0.12 | 0.09 | A |
| 11 Back-EMF Constant | $k_E$ | 1.83 | 2.22 | 2.93 | mV/rpm |
| 12 Torque Constant | $k_M$ | 17.45 | 21.21 | 27.94 | mNm/A |
| 13 Motor Regulation | $R/k^2$ | 249.78 | 287.47 | 266.44 | $10^3$/Nms |
| 14 Friction Torque | $T_F$ | 0.063 (0.009) | 0.063 (0.009) | 0.063 (0.009) | mNm (oz-in) |
| 15 Mechanical Time Constant | $\tau_m$ | 24.89 | 24.87 | 28.14 | ms |
| 16 Rotor Inertia | J | 1.00 | 0.87 | 1.06 | $g.cm^2$ |
| **General Data** | | | | | |
| 17 Thermal Resistance (rotor/body) | $R_{th1}$ / $R_{th2}$ | | 7/35 | | °C/W |
| 18 Thermal Time Constant (rotor/stator) | $t_{w1}/t_{w2}$ | | 6/380 | | S |
| 19 Operating Temperature Range: | $t_{w1}/t_{w2}$ | | -30°C to 85°C (-22°F to 185°F) | | °C (°F) |
| | rotor | | 100°C (212°F) | | °C (°F) |
| 20 Shaft Load Max.: | | | With sleeve bearings | | |
| (5mm from bearing) | -radial | | 1.5 (5.39) | | N (oz) |
| | -axial | | 100 (359.6) | | N (oz) |
| 21 Shaft Play: | -radial | | 0.03 (0.0012) | | mm (inch) |
| | -axial | | 0.15 (0.0059) | | mm (inch) |
| 22 Weight | g | | 23 (0.82) | | g (oz) |

* Also available with ball bearing

| Execution Table | | | |
|---|---|---|---|
| Gearbox | Single Shaft | MR2 | M Sense B |
| R16 | 1 | 2 | Upon Request |
| B16 | 3 | 4 | Upon Request |
| BA16 | 3 | 4 | Upon Request |

Note:
P1:standard commutation
P2:special commutation for double shaft version

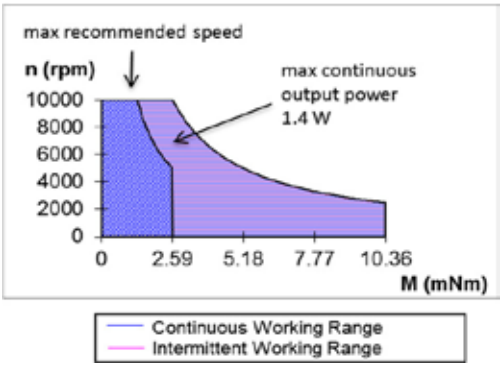


V121616

## 16NS78 Athlonix™ Precious metal commutation Ø16mm 2.6 mNm

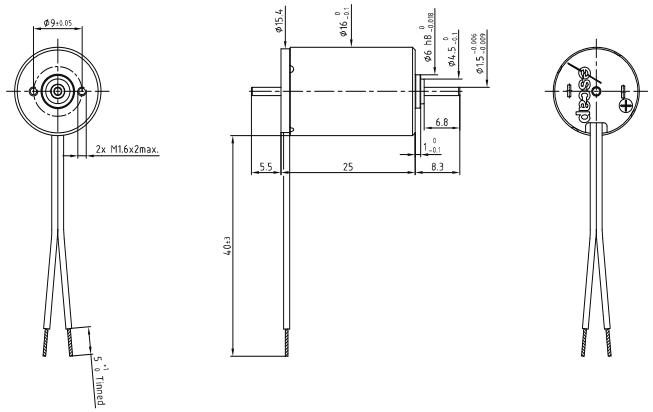


Dimensions in mm

### 16NS78 **** .1

| Electrical Data | **** | 213E | 212F | |
|---|---|---|---|---|
| 1 Nominal Voltage | V | 6 | 7.5 | Volt |
| 2 No-Load Speed | $n_0$ | 10,280 | 10,865 | rpm |
| 3 No-Load Current | $I_0$ | 25.0 | 18.0 | mA |
| 4 Terminal Resistance | R | 7.5 | 12.2 | Ω |
| 5 Output Power | $P_{2max.}$ | 1.7 | 1.6 | W |
| 6 Stall Torque | mNm | 4.3 | 3.9 | mNm (oz-in) |
| 7 Efficiency | $h_{max.}$ | 68 | 69 | % |
| 8 Max Continuous Speed | $n_{e\ max.}$ | 10,000 | 10,000 | rpm |
| 9 Max Continuous Torque | $M_{e\ max.}$ | 2.6 (0.34) | 2.4 (0.34) | mNm (oz-in) |
| 10 Max Continuous Current | $I_{e\ max.}$ | 0.50 | 0.38 | A |
| 11 Back-EMF Constant | $k_E$ | 0.57 | 0.67 | mV/rpm |
| 12 Torque Constant | $k_M$ | 5.40 | 6.40 | mNm/A |
| 13 Motor Regulation | $R/k^2$ | 255.0 | 300.0 | $10^3$/Nms |
| 14 Friction Torque | $T_F$ | 0.12 (0.02) | 0.12 (0.02) | mNm (oz-in) |
| 15 Rotor Inductance | L | 0.15 | 0.23 | mH |
| 16 Mechanical Time Constant | $t_m$ | 12.8 | 15.0 | ms |
| 17 Rotor Inertia | J | 0.50 | 0.50 | $g.cm^2$ |
| **General Data** | | | | |
| 18 Thermal Resistance (rotor/body) | $R_{th1}$ / $R_{th2}$ | 13/38 | | °C/W |
| 19 Thermal Time Constant (rotor/stator) | $t_{w1}/t_{w2}$ | 7/400 | | S |
| 20 Operating Temperature Range: | motor | -30°C to 85°C (-22°F to 185°F) | | °C (°F) |
| | rotor | 100°C (212°F) | | °C (°F) |
| 21 Shaft Load Max.: | | With sleeve bearings | | |
| (5mm from bearing) | -radial | 1.5 (5.4) | | N (oz) |
| | -axial | 100 (359.6) | | N (oz) |
| 22 Shaft Play: | -radial | <0.03 (0.0012) | | mm (inch) |
| | -axial | 0.15 (0.0059) | | mm (inch) |
| 23 Weight | g | 19 (0.68) | | g (oz) |

| Execution Table | | |
|---|---|---|
| Gearbox | Single Shaft | MR2 |
| B16 | 3 | Upon request |
| BA16 | 3 | Upon request |
| R16 | Upon request | Upon request |

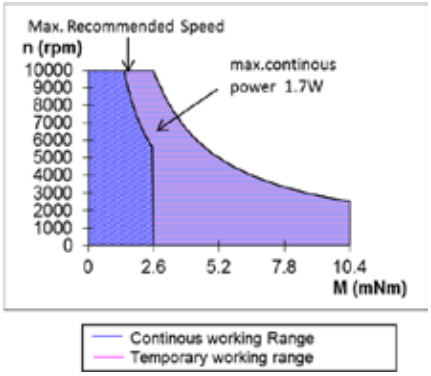


V121616

## 16S78 Athlonix™ Precious metal commutation Ø16mm 2.8 mNm

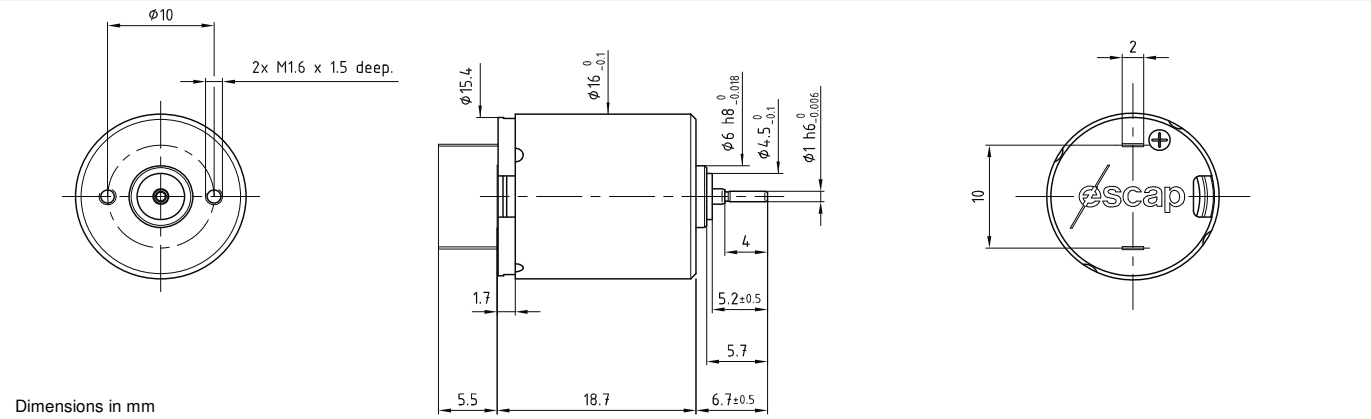


### 16S78 **** .1

| Electrical Data | **** | 208P | 210E | 209E | |
|---|---|---|---|---|---|
| 1 Nominal Voltage | V | 6 | 7.5 | 12 | Volt |
| 2 No-Load Speed | $n_0$ | 10,280 | 10,865 | 12,430 | rpm |
| 3 No-Load Current | $I_0$ | 25.0 | 18.0 | 8.4 | mA |
| 4 Terminal Resistance | R | 7.5 | 12.2 | 18.6 | Ω |
| 5 Output Power | $P_{2max.}$ | 1.7 | 1.6 | 1.8 | W |
| 6 Stall Torque | mNm | 4.3 | 3.9 | 5.9 | mNm (oz-in) |
| 7 Efficiency | $h_{max.}$ | 68 | 69 | 78 | % |
| 8 Max Continuous Speed | $n_{e\ max.}$ | 10,000 | 10,000 | 10,000 | rpm |
| 9 Max Continuous Torque | $M_{e\ max.}$ | 2.6 (0.34) | 2.4 (0.34) | 2.8 (0.4) | mNm (oz-in) |
| 10 Max Continuous Current | $I_{e\ max.}$ | 0.50 | 0.38 | 0.32 | A |
| 11 Back-EMF Constant | $k_E$ | 0.57 | 0.67 | 0.95 | mV/rpm |
| 12 Torque Constant | $k_M$ | 5.40 | 6.40 | 9.10 | mNm/A |
| 13 Motor Regulation | $R/k^2$ | 255.0 | 300.0 | 225.0 | $10^3$/Nms |
| 14 Friction Torque | $T_F$ | 0.12 (0.02) | 0.12 (0.02) | 0.08 (0.02) | mNm (oz-in) |
| 15 Rotor Inductance | L | 0.15 | 0.23 | 0.35 | mH |
| 16 Mechanical Time Constant | $t_m$ | 12.8 | 15.0 | 11.3 | ms |
| 17 Rotor Inertia | J | 0.50 | 0.50 | 0.50 | $g.cm^2$ |
| **General Data** | | | | | |
| 18 Thermal Resistance (rotor/body) | $R_{th1}$ / $R_{th2}$ | | 13/38 | | °C/W |
| 19 Thermal Time Constant (rotor/stator) | $t_{w1}/t_{w2}$ | | 7/400 | | S |
| 20 Operating Temperature Range: | motor | | -30°C to 85°C (-22°F to 185°F) | | °C (°F) |
| | rotor | | 100°C (212°F) | | °C (°F) |
| 21 Shaft Load Max.: | | | With sleeve bearings | | |
| (5mm from bearing) | -radial | | 1.5 (5.4) | | N (oz) |
| | -axial | | 100 (359.6) | | N (oz) |
| 22 Shaft Play: | -radial | | <0.03 (0.0012) | | mm (inch) |
| | -axial | | 0.15 (0.0059) | | mm (inch) |
| 23 Weight | g | | 19 (0.68) | | g (oz) |

| Execution Table | | |
|---|---|---|
| Gearbox | Single Shaft | MR2 |
| B16 | 2 | 3 |
| BA16 | 2 | 3 |
| R16 | 2 | 3 |

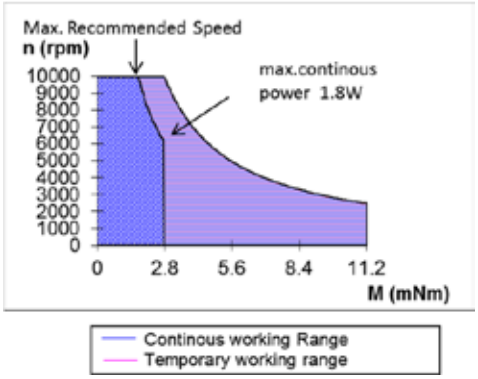


V121616

## 16G88 Precious metal commutation Ø16mm 5.8 mNm

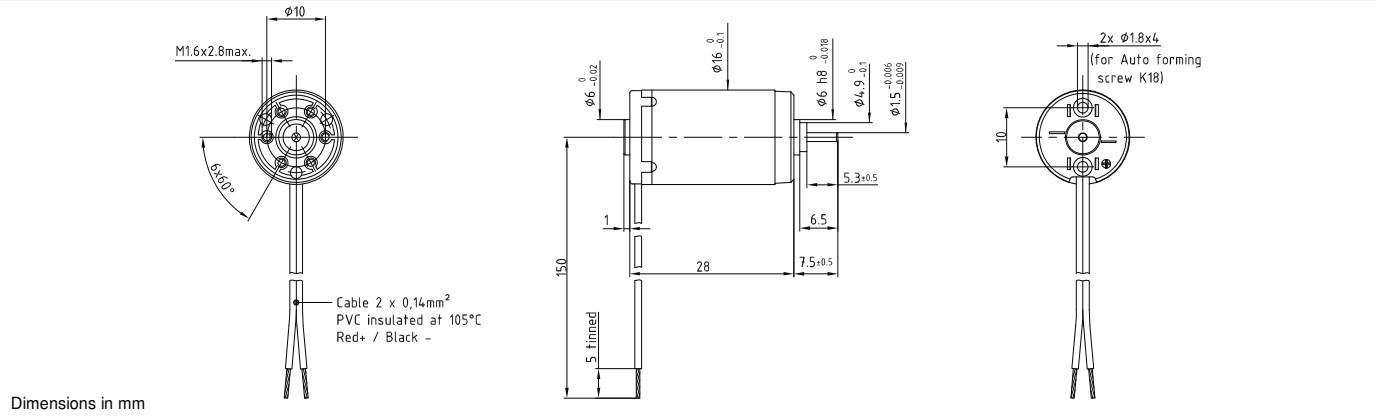


### 16G88 **** .1

| Electrical Data | **** | 220P | 214E | 213E | 211E | 210E | 205E | |
|---|---|---|---|---|---|---|---|---|
| 1 Nominal Voltage | V | 3 | 8 | 9 | 12 | 15 | 32 | Volt |
| 2 No-Load Speed | $n_0$ | 11,025 | 9,250 | 7,980 | 8,690 | 9,000 | 8,150 | rpm |
| 3 No-Load Current | $I_0$ | 45.0 | 10.0 | 8.0 | 6.5 | 5.5 | 2.0 | mA |
| 4 Terminal Resistance | R | 0.5 | 5.4 | 7.6 | 13.0 | 19.5 | 135.0 | Ω |
| 5 Output Power | $P_{2max.}$ | 4.1 | 4.2 | 4.6 | 4.2 | 4.2 | 2.5 | W |
| 6 Stall Torque | mNm | 16 (2.27) | 12.1 (1.72) | 12.7 (1.8) | 12.1 (1.72) | 12.2 (1.73) | 8.8 (1.25) | mNm (oz-in) |
| 7 Efficiency | $h_{max.}$ | 83 | 84 | 84 | 84 | 84 | 82 | % |
| 8 Max Continuous Speed | $n_{e\ max.}$ | 10,000 | 10,000 | 10,000 | 10,000 | 10,000 | 10,000 | rpm |
| 9 Max Continuous Torque | $M_{e\ max.}$ | 5.5 (0.76) | 5.3 (0.76) | 5.8 (0.83) | 5.4 (0.77) | 5.4 (0.77) | 4.8 (0.68) | mNm (oz-in) |
| 10 Max Continuous Current | $I_{e\ max.}$ | 2.20 | 0.66 | 0.55 | 0.42 | 0.35 | 0.13 | A |
| 11 Back-EMF Constant | $k_E$ | 0.27 | 0.86 | 1.12 | 1.37 | 1.65 | 3.90 | mV/rpm |
| 12 Torque Constant | $k_M$ | 2.58 | 8.20 | 10.70 | 13.10 | 15.80 | 37.20 | mNm/A |
| 13 Motor Regulation | $R/k^2$ | 75.1 | 80.3 | 66.4 | 75.75 | 78.11 | 97.55 | $10^3$/Nms |
| 14 Friction Torque | $T_F$ | 0.12 (0.02) | 0.08 (0.02) | 0.09 (0.02) | 0.09 (0.02) | 0.09 (0.02) | 0.07 (0.01) | mNm (oz-in) |
| 15 Rotor Inductance | L | 0.01 | 0.12 | 0.15 | 0.26 | 0.40 | 1.70 | mH |
| 16 Mechanical Time Constant | $t_m$ | 6.0 | 6.4 | 5.3 | 6.1 | 5.8 | 7.8 | ms |
| 17 Rotor Inertia | J | 0.80 | 0.80 | 0.80 | 0.80 | 0.74 | 0.80 | $g.cm^2$ |
| **General Data** | | | | | | | | |
| 18 Thermal Resistance (rotor/body) | $R_{th1}$ / $R_{th2}$ | 8 / 35 | | | | | | °C/W |
| 19 Thermal Time Constant (rotor/stator) | $t_{w1}/t_{w2}$ | 6 / 500 | | | | | | S |
| 20 Operating Temperature Range: | motor | -30°C to 85°C (-22°F to 185°F) | | | | | | °C (°F) |
| | rotor | 100°C (212°F) | | | | | | °C (°F) |
| 21 Shaft Load Max.: | | With sleeve bearings | | | | | | |
| (5mm from bearing) | -radial | 1.5 (5.4) | | | | | | N (oz) |
| | -axial | 100 (359.6) | | | | | | N (oz) |
| 22 Shaft Play: | -radial | <0.03 (0.0012) | | | | | | mm (inch) |
| | -axial | 0.15 (0.0059) | | | | | | mm (inch) |
| 23 Weight | g | 24 (0.85) | | | | | | g (oz) |

| Execution Table | | |
|---|---|---|
| Gearbox | Single Shaft | MR2 |
| B16 | 5 | Upon Request |
| BA16 | 5 | Upon Request |
| R16 | 1 | Upon Request |

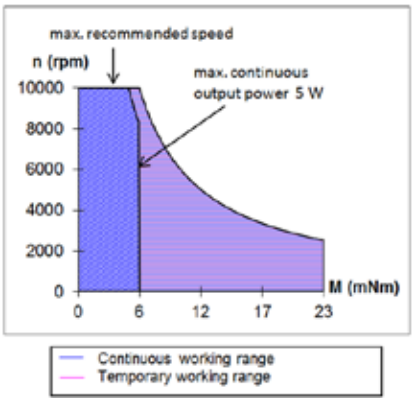


V121616

## 16N78 Athlonix™ Precious metal commutation Ø16mm 6.9 mNm

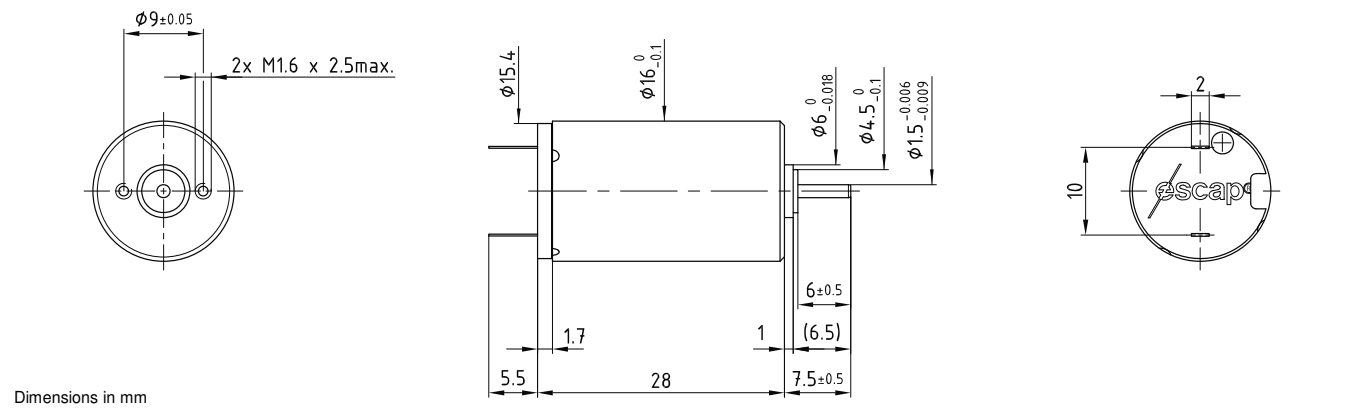


### 16N78 **** .1001

| Electrical Data | **** | 135 | 212P | 214E | 212E | 210E | 208E | |
|---|---|---|---|---|---|---|---|---|
| 1 Nominal Voltage | V | 1.5 | 6 | 9 | 12 | 18 | 24 | Volt |
| 2 No-Load Speed | $n_0$ | 9,475 | 8,350 | 8,275 | 8,380 | 9,270 | 8,200 | rpm |
| 3 No-Load Current | $I_0$ | 60.0 | 18.0 | 10.0 | 5.0 | 5.0 | 4.0 | mA |
| 4 Terminal Resistance | R | 0.2 | 3.0 | 7.5 | 13.2 | 27.5 | 60.5 | Ω |
| 5 Output Power | $P_{2max.}$ | 4.7 | 5.4 | 5.2 | 5.2 | 4.9 | 4.9 | W |
| 6 Stall Torque | mNm | 11.5 (1.63) | 13.6 (1.93) | 12.4 (1.76) | 12.4 (1.76) | 12 (1.7) | 11 (1.56) | mNm (oz-in) |
| 7 Efficiency | $h_{max.}$ | 83 | 82 | 83 | 86 | 83 | 81 | % |
| 8 Max Continuous Speed | $n_{e\ max.}$ | 10,000 | 10,000 | 10,000 | 10,000 | 10,000 | 10,000 | rpm |
| 9 Max Continuous Torque | $M_{e\ max.}$ | 6 (0.98) | 6.9 (0.98) | 6.6 (0.94) | 6.6 (0.94) | 6.2 (0.88) | 6.3 (0.9) | mNm (oz-in) |
| 10 Max Continuous Current | $I_{e\ max.}$ | 4.00 | 1.03 | 0.65 | 0.49 | 0.34 | 0.23 | A |
| 11 Back-EMF Constant | $k_E$ | 0.16 | 0.71 | 1.08 | 1.42 | 1.93 | 2.90 | mV/rpm |
| 12 Torque Constant | $k_M$ | 1.50 | 6.80 | 10.30 | 13.60 | 18.40 | 27.70 | mNm/A |
| 13 Motor Regulation | $R/k^2$ | 88.9 | 64.9 | 70.7 | 71.37 | 81.23 | 78.85 | $10^3$/Nms |
| 14 Friction Torque | $T_F$ | 0.09 (0.02) | 0.12 (0.02) | 0.1 (0.02) | 0.07 (0.01) | 0.09 (0.02) | 0.08 (0.02) | mNm (oz-in) |
| 15 Rotor Inductance | L | 0.01 | 0.10 | 0.30 | 0.50 | 1.00 | 2.40 | mH |
| 16 Mechanical Time Constant | $t_m$ | 9.8 | 6.8 | 8.8 | 8.6 | 9.7 | 9.3 | ms |
| 17 Rotor Inertia | J | 1.10 | 1.05 | 1.25 | 1.20 | 1.20 | 1.18 | $g.cm^2$ |
| **General Data** | | | | | | | | |
| 18 Thermal Resistance (rotor/body) | $R_{th1}$ / $R_{th2}$ | 6 /25 | | | | | | °C/W |
| 19 Thermal Time Constant (rotor/stator) | $t_{w1}/t_{w2}$ | 12/250 | | | | | | S |
| 20 Operating Temperature Range: | motor | -30°C to 85°C (-22°F to 185°F) | | | | | | °C (°F) |
| | rotor | 100°C (212°F) | | | | | | °C (°F) |
| 21 Shaft Load Max.: | | With sleeve bearings | | | | | | |
| (5mm from bearing) | -radial | 1.5 (5.4) | | | | | | N (oz) |
| | -axial | 100 (359.6) | | | | | | N (oz) |
| 22 Shaft Play: | -radial | <0.03 (0.0012) | | | | | | mm (inch) |
| | -axial | 0.15 (0.0059) | | | | | | mm (inch) |
| 23 Weight | g | 24 (0.85) | | | | | | g (oz) |

| Execution Table | | |
|---|---|---|
| Gearbox | Single Shaft | MR2 |
| B16 | 1005 | 1008 |
| BA16 | 1005 | 1008 |
| R16 | 1001 | 1007 |

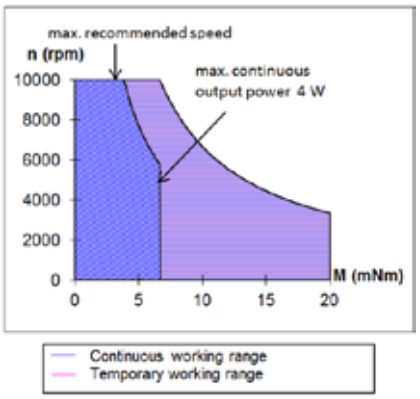


V121616

## 17S78 Precious metal commutation Ø17mm 2.8 mNm

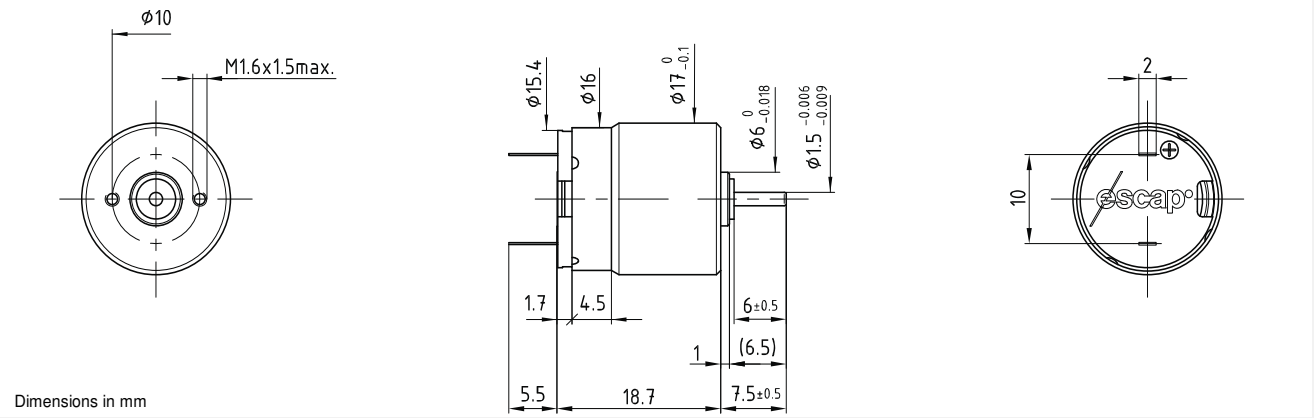


### 17S78 **** .1

| Electrical Data | **** | 208P | 210E | 209E | |
|---|---|---|---|---|---|
| 1 Nominal Voltage | V | 6 | 7.5 | 12 | Volt |
| 2 No-Load Speed | $n_0$ | 10,280 | 10,865 | 12,430 | rpm |
| 3 No-Load Current | $I_0$ | 25.0 | 18.0 | 8.4 | mA |
| 4 Terminal Resistance | R | 7.5 | 12.2 | 18.6 | Ω |
| 5 Output Power | $P_{2max.}$ | 1.7 | 1.6 | 1.8 | W |
| 6 Stall Torque | mNm | 4.3 (0.61) | 3.9 (0.56) | 5.9 (0.84) | mNm (oz-in) |
| 7 Efficiency | $h_{max.}$ | 68 | 69 | 78 | % |
| 8 Max Continuous Speed | $n_{e\ max.}$ | 10,000 | 10,000 | 10,000 | rpm |
| 9 Max Continuous Torque | $M_{e\ max.}$ | 2.6 (0.34) | 2.4 (0.34) | 2.8 (0.4) | mNm (oz-in) |
| 10 Max Continuous Current | $I_{e\ max.}$ | 0.50 | 0.38 | 0.32 | A |
| 11 Back-EMF Constant | $k_E$ | 0.57 | 0.67 | 0.95 | mV/rpm |
| 12 Torque Constant | $k_M$ | 5.40 | 6.40 | 9.10 | mNm/A |
| 13 Motor Regulation | $R/k^2$ | 255.0 | 300.0 | 225.0 | $10^3$/Nms |
| 14 Friction Torque | $T_F$ | 0.12 (0.02) | 0.12 (0.02) | 0.08 (0.02) | mNm (oz-in) |
| 15 Rotor Inductance | L | 0.15 | 0.23 | 0.35 | mH |
| 16 Mechanical Time Constant | $t_m$ | 12.8 | 15.0 | 11.3 | ms |
| 17 Rotor Inertia | J | 0.50 | 0.50 | 0.50 | $g.cm^2$ |
| **General Data** | | | | | |
| 18 Thermal Resistance (rotor/body) | $R_{th1}$ / $R_{th2}$ | | 13/38 | | °C/W |
| 19 Thermal Time Constant (rotor/stator) | $t_{w1}/t_{w2}$ | | 7/400 | | S |
| 20 Operating Temperature Range: | motor | | -30°C to 85°C (-22°F to 185°F) | | °C (°F) |
| | rotor | | 100°C (212°F) | | °C (°F) |
| 21 Shaft Load Max.: | | | With sleeve bearings | | |
| (5mm from bearing) | -radial | | 1.5 (5.4) | | N (oz) |
| | -axial | | 100 (359.6) | | N (oz) |
| 22 Shaft Play: | -radial | | <0.03 (0.0012) | | mm (inch) |
| | -axial | | 0.15 (0.0059) | | mm (inch) |
| 23 Weight | g | | 19 (0.68) | | g (oz) |

| Execution Table | | | |
|---|---|---|---|
| Gearbox | Single Shaft | F16 | MR2 |
| B16 | 5 | 5 | Upon Request |
| BA16 | 5 | 5 | Upon Request |
| R16 | 1 | 1 | 96 |

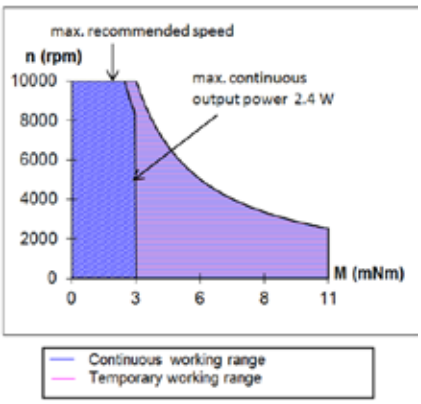


V121616

## 17DCT Athlonix™ Graphite-Copper commutation Ø17mm 5.88 mNm

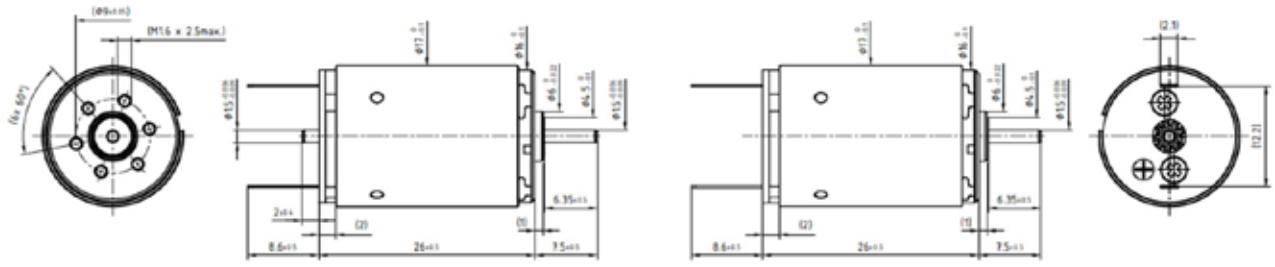

Dimensions in mm

### 17DCT 26G1/G2 **** .*

| Electrical Data | **** | 216P | 211P | 209P | 208P | 207P | |
|---|---|---|---|---|---|---|---|
| 1 Nominal Voltage | V | 3 | 6 | 9 | 12 | 15 | Volt |
| 2 No-Load Speed | $n_0$ | 7657 | 7690 | 7498 | 8011 | 8206 | rpm |
| 3 No-Load Current | $I_0$ | 92.6 | 46.3 | 30.1 | 24.1 | 19.7 | mA |
| 4 Terminal Resistance | R | 1.0 | 3.4 | 7.8 | 12.2 | 18.7 | Ω |
| 5 Output Power | $P_{2max.}$ | 4.1 | 4.5 | 4.5 | 4.5 | 4.4 | W |
| 6 Stall Torque | mNm | 10.8 (1.53) | 12.57 (1.79) | 12.61 (1.79) | 13.43 (1.91) | 13.3 (1.89) | mNm (oz-in) |
| 7 Efficiency | $\eta_{max.}$ | 68 | 70 | 70 | 71 | 71 | % |
| 8 Max Continuous Speed | $n_{e\ max.}$ | 10000 | 10000 | 10000 | 10000 | 10000 | rpm |
| 9 Max Continuous Torque | $M_{e\ max.}$ | 5.25 (0.75) | 5.68 (0.81) | 5.77 (0.82) | 5.76 (0.82) | 5.65 (0.81) | mNm (oz-in) |
| 10 Max Continuous Current | $I_{e\ max.}$ | 1.54 | 0.83 | 0.55 | 0.44 | 0.35 | A |
| 11 Back-EMF Constant | $k_E$ | 0.38 | 0.76 | 1.17 | 1.46 | 1.78 | mV/rpm |
| 12 Torque Constant | $k_M$ | 3.63 | 7.26 | 11.16 | 13.96 | 17.03 | mNm/A |
| 13 Motor Regulation | $R/k^2$ | 74.24 | 64.05 | 62.25 | 62.43 | 64.59 | $10^3$/Nms |
| 14 Friction Torque | $T_F$ | 0.3 (0.042) | 0.3 (0.042) | 0.3 (0.042) | 0.3 (0.042) | 0.3 (0.042) | mNm (oz-in) |
| 15 Mechanical Time Constant | $\tau_m$ | 7.81 | 6.61 | 6.38 | 6.32 | 6.28 | ms |
| 16 Rotor Inertia | J | 1.05 | 1.03 | 1.02 | 1.01 | 0.97 | $g.cm^2$ |
| **General Data** | | | | | | | |
| 17 Thermal Resistance (rotor/body) | $R_{th1}$ / $R_{th2}$ | 6/25 | | | | | ℃/W |
| 18 Thermal Time Constant (rotor/stator) | $t_{w1}/t_{w2}$ | 12/250 | | | | | S |
| 19 Operating Temperature Range: | $t_{w1}/t_{w2}$ | -30℃ to 85℃ (-22℉ to 185℉) | | | | | ℃ (℉) |
| | rotor | 100℃ (212℉) | | | | | ℃ (℉) |
| 20 Shaft Load Max.: | | With sleeve bearings | | | | | |
| (5mm from bearing) | -radial | 1.5 (5.39) | | | | | N (oz) |
| | -axial | 100 (359.6) | | | | | N (oz) |
| 21 Shaft Play: | -radial | 0.03 (0.0012) | | | | | mm (inch) |
| | -axial | 0.15 (0.0059) | | | | | mm (inch) |
| 22 Weight | g | 27 (0.96) | | | | | g (oz) |

* Also available with ball bearing

| Execution Table | | | |
|---|---|---|---|
| Gearbox | Single Shaft | MR2 | M Sense B |
| R16 | 1 | 2 | Upon Request |
| B16 | 3 | 4 | Upon Request |
| BA16 | 3 | 4 | Upon Request |

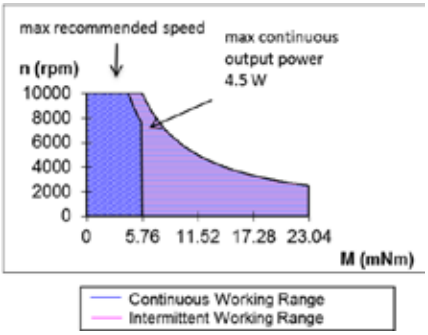


Note:
G1:standard commutation
G2:special commutation for double shaft version

V121616

# 17DCT Athlonix™ Graphite-Copper commutation Ø17mm 5.88 mNm

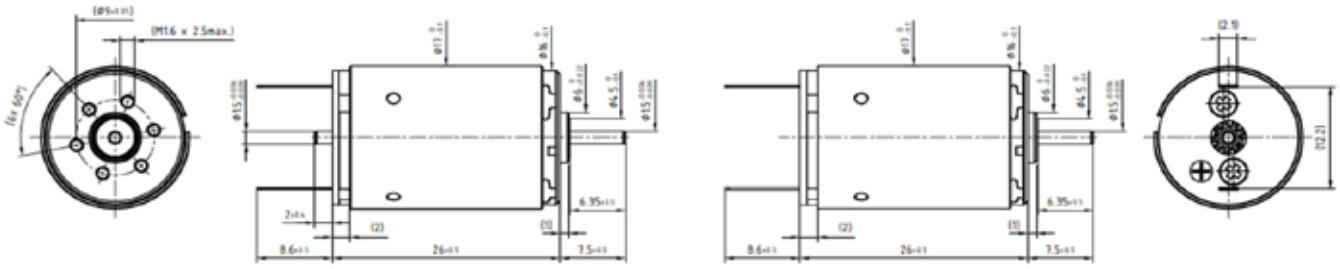

Dimensions in mm

## 17DCT 26G1/G2 **** .*

| Electrical Data | **** | 209E | 205P | 107P | 205E | |
|---|---|---|---|---|---|---|
| 1 Nominal Voltage | V | 18 | 24 | 36 | 48 | Volt |
| 2 No-Load Speed | $n_0$ | 7869 | 7628 | 9653 | 7988 | rpm |
| 3 No-Load Current | $I_0$ | 15.8 | 11.5 | 9.6 | 6.0 | mA |
| 4 Terminal Resistance | R | 30.8 | 51.5 | 76.1 | 208.2 | Ω |
| 5 Output Power | $P_{2max.}$ | 4.3 | 4.6 | 4.5 | 4.4 | W |
| 6 Stall Torque | mNm | 12.07 (1.71) | 13.33 (1.89) | 16.16 (2.29) | 12.55 (1.78) | mNm (oz-in) |
| 7 Efficiency | $\eta_{max.}$ | 70 | 71 | 73 | 70 | % |
| 8 Max Continuous Speed | $n_{e\ max.}$ | 10000 | 10000 | 10000 | 10000 | rpm |
| 9 Max Continuous Torque | $M_{e\ max.}$ | 5.49 (0.78) | 5.88 (0.84) | 5.75 (0.82) | 5.56 (0.79) | mNm (oz-in) |
| 10 Max Continuous Current | $I_{e\ max.}$ | 0.27 | 0.21 | 0.17 | 0.11 | A |
| 11 Back-EMF Constant | $k_E$ | 2.23 | 3.07 | 3.65 | 5.85 | mV/rpm |
| 12 Torque Constant | $k_M$ | 21.25 | 29.31 | 34.89 | 55.88 | mNm/A |
| 13 Motor Regulation | $R/k^2$ | 68.23 | 59.91 | 62.53 | 66.65 | $10^3$/Nms |
| 14 Friction Torque | $T_F$ | 0.3 (0.042) | 0.3 (0.042) | 0.3 (0.042) | 0.3 (0.042) | mNm (oz-in) |
| 15 Mechanical Time Constant | $\tau_m$ | 7.08 | 6.24 | 6.23 | 7.04 | ms |
| 16 Rotor Inertia | J | 1.04 | 1.04 | 1.00 | 1.06 | $g.cm^2$ |
| **General Data** | | | | | | |
| 17 Thermal Resistance (rotor/body) | $R_{th1}$ / $R_{th2}$ | 6/25 | | | | °C/W |
| 18 Thermal Time Constant (rotor/stator) | $t_{w1}/t_{w2}$ | 12/250 | | | | S |
| 19 Operating Temperature Range: | $t_{w1}/t_{w2}$ | -30°C to 85°C (-22°F to 185°F) | | | | °C (°F) |
| | rotor | 100°C (212°F) | | | | °C (°F) |
| 20 Shaft Load Max.: | | With sleeve bearings | | | | |
| (5mm from bearing) | -radial | 1.5 (5.39) | | | | N (oz) |
| | -axial | 100 (359.6) | | | | N (oz) |
| 21 Shaft Play: | -radial | 0.03 (0.0012) | | | | mm (inch) |
| | -axial | 0.15 (0.0059) | | | | mm (inch) |
| 22 Weight | g | 27 (0.96) | | | | g (oz) |

* Also available with ball bearing

| Execution Table | | | |
|---|---|---|---|
| Gearbox | Single Shaft | MR2 | M Sense B |
| R16 | 1 | 2 | Upon Request |
| B16 | 3 | 4 | Upon Request |
| BA16 | 3 | 4 | Upon Request |

Note:
G1:standard commutation
G2:special commutation for double shaft version

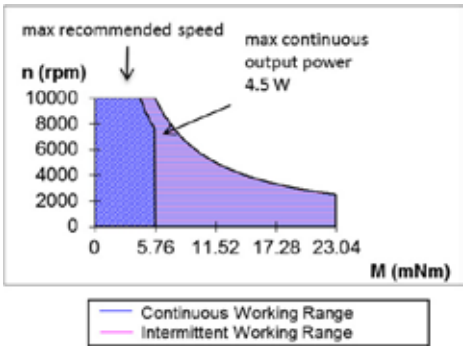


V121616

## 17DCT Athlonix™ Precious metal commutation Ø17mm 6.14 mNm

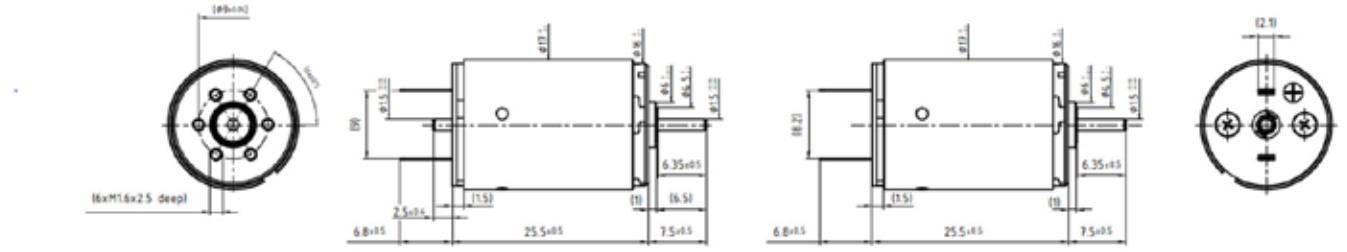

Dimensions in mm

### 17DCT 26P1/P2 **** .*

| Electrical Data | **** | 216P | 211P | 209P | 208P | 207P | |
|---|---|---|---|---|---|---|---|
| 1 Nominal Voltage | V | 3 | 6 | 9 | 12 | 15 | Volt |
| 2 No-Load Speed | $n_0$ | 7838 | 7842 | 7645 | 8158 | 8358 | rpm |
| 3 No-Load Current | $I_0$ | 24.7 | 12.3 | 8.0 | 6.4 | 5.3 | mA |
| 4 Terminal Resistance | R | 0.9 | 3.3 | 7.7 | 12.1 | 18.6 | Ω |
| 5 Output Power | $P_{2max.}$ | 4.6 | 4.7 | 4.8 | 4.7 | 4.7 | W |
| 6 Stall Torque | mNm | 12.31 (1.75) | 13.21 (1.88) | 13.02 (1.85) | 13.79 (1.96) | 13.62 (1.93) | mNm (oz-in) |
| 7 Efficiency | $\eta_{max.}$ | 84 | 84 | 84 | 85 | 84 | % |
| 8 Max Continuous Speed | $n_{e\ max.}$ | 10000 | 10000 | 10000 | 10000 | 10000 | rpm |
| 9 Max Continuous Torque | $M_{e\ max.}$ | 5.81 (0.83) | 6.02 (0.86) | 6.05 (0.86) | 6.03 (0.86) | 5.92 (0.84) | mNm (oz-in) |
| 10 Max Continuous Current | $I_{e\ max.}$ | 1.63 | 0.84 | 0.55 | 0.44 | 0.35 | A |
| 11 Back-EMF Constant | $k_E$ | 0.38 | 0.76 | 1.17 | 1.46 | 1.78 | mV/rpm |
| 12 Torque Constant | $k_M$ | 3.63 | 7.26 | 11.16 | 13.96 | 17.03 | mNm/A |
| 13 Motor Regulation | $R/k^2$ | 66.64 | 62.15 | 61.45 | 61.92 | 64.25 | $10^3$/Nms |
| 14 Friction Torque | $T_F$ | 0.08 (0.011) | 0.08 (0.011) | 0.08 (0.011) | 0.08 (0.011) | 0.08 (0.011) | mNm (oz-in) |
| 15 Mechanical Time Constant | $\tau_m$ | 7.01 | 6.41 | 6.30 | 6.27 | 6.25 | ms |
| 16 Rotor Inertia | J | 1.05 | 1.03 | 1.02 | 1.01 | 0.97 | $g.cm^2$ |
| **General Data** | | | | | | | |
| 17 Thermal Resistance (rotor/body) | $R_{th1}$ / $R_{th2}$ | 6/25 | | | | | °C/W |
| 18 Thermal Time Constant (rotor/stator) | $t_{w1}/t_{w2}$ | 12/250 | | | | | S |
| 19 Operating Temperature Range: | $t_{w1}/t_{w2}$ | -30°C to 85°C (-22°F to 185°F) | | | | | °C (°F) |
| | rotor | 100°C (212°F) | | | | | °C (°F) |
| 20 Shaft Load Max.: | | With sleeve bearings | | | | | |
| (5mm from bearing) | -radial | 1.5 (5.39) | | | | | N (oz) |
| | -axial | 100 (359.6) | | | | | N (oz) |
| 21 Shaft Play: | -radial | 0.03 (0.0012) | | | | | mm (inch) |
| | -axial | 0.15 (0.0059) | | | | | mm (inch) |
| 22 Weight | g | 27 (0.96) | | | | | g (oz) |

* Also available with ball bearing

| Execution Table | | | |
|---|---|---|---|
| Gearbox | Single Shaft | MR2 | M Sense B |
| R16 | 1 | 2 | Upon Request |
| B16 | 3 | 4 | Upon Request |
| BA16 | 3 | 4 | Upon Request |

Note:
P1:standard commutation
P2:special commutation for double shaft version

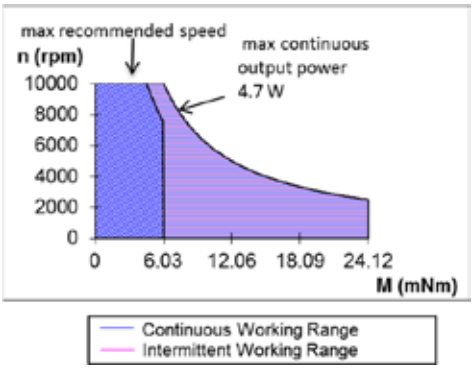


V121616

## 17DCT Athlonix™ Precious metal commutation Ø17mm 6.14 mNm

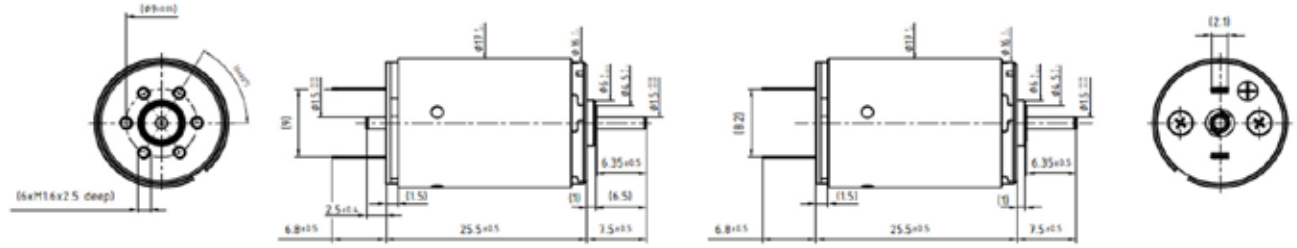

Dimensions in mm

### 17DCT 26P1/P2 **** .*

| Electrical Data | **** | 209E | 205P | 107P | 205E | |
|---|---|---|---|---|---|---|
| 1 Nominal Voltage | V | 18 | 24 | 36 | 48 | Volt |
| 2 No-Load Speed | $n_0$ | 8030 | 7769 | 9800 | 8145 | rpm |
| 3 No-Load Current | $I_0$ | 4.2 | 3.1 | 2.6 | 1.6 | mA |
| 4 Terminal Resistance | R | 30.7 | 51.4 | 76.0 | 208.1 | Ω |
| 5 Output Power | $P_{2max.}$ | 4.5 | 4.8 | 4.7 | 4.6 | W |
| 6 Stall Torque | mNm | 12.36 (1.76) | 13.6 (1.93) | 16.43 (2.33) | 12.8 (1.82) | mNm (oz-in) |
| 7 Efficiency | $\eta_{max.}$ | 84 | 84 | 86 | 84 | % |
| 8 Max Continuous Speed | $n_{e\ max.}$ | 10000 | 10000 | 10000 | 10000 | rpm |
| 9 Max Continuous Torque | $M_{e\ max.}$ | 5.75 (0.82) | 6.14 (0.87) | 6 (0.85) | 5.8 (0.83) | mNm (oz-in) |
| 10 Max Continuous Current | $I_{e\ max.}$ | 0.27 | 0.21 | 0.17 | 0.11 | A |
| 11 Back-EMF Constant | $k_E$ | 2.23 | 3.07 | 3.65 | 5.85 | mV/rpm |
| 12 Torque Constant | $k_M$ | 21.25 | 29.31 | 34.89 | 55.88 | mNm/A |
| 13 Motor Regulation | $R/k^2$ | 68.01 | 59.79 | 62.45 | 66.62 | $10^3$/Nms |
| 14 Friction Torque | $T_F$ | 0.08 (0.011) | 0.08 (0.011) | 0.08 (0.011) | 0.08 (0.011) | mNm (oz-in) |
| 15 Mechanical Time Constant | $\tau_m$ | 7.06 | 6.23 | 6.22 | 7.04 | ms |
| 16 Rotor Inertia | J | 1.04 | 1.04 | 1.00 | 1.06 | $g.cm^2$ |
| **General Data** | | | | | | |
| 17 Thermal Resistance (rotor/body) | $R_{th1}$ / $R_{th2}$ | 6/25 | | | | °C/W |
| 18 Thermal Time Constant (rotor/stator) | $t_{w1}/t_{w2}$ | 12/250 | | | | S |
| 19 Operating Temperature Range: | $t_{w1}/t_{w2}$ | -30°C to 85°C (-22°F to 185°F) | | | | °C (°F) |
| | rotor | 100°C (212°F) | | | | °C (°F) |
| 20 Shaft Load Max.: | | With sleeve bearings | | | | |
| (5mm from bearing) | -radial | 1.5 (5.39) | | | | N (oz) |
| | -axial | 100 (359.6) | | | | N (oz) |
| 21 Shaft Play: | -radial | 0.03 (0.0012) | | | | mm (inch) |
| | -axial | 0.15 (0.0059) | | | | mm (inch) |
| 22 Weight | g | 27 (0.96) | | | | g (oz) |

* Also available with ball bearing

| Execution Table | | | |
|---|---|---|---|
| Gearbox | Single Shaft | MR2 | M Sense B |
| R16 | 1 | 2 | Upon Request |
| B16 | 3 | 4 | Upon Request |
| BA16 | 3 | 4 | Upon Request |

Note:
P1:standard commutation
P2:special commutation for double shaft version

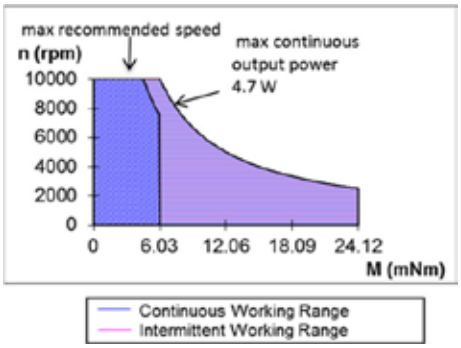


V121616

## 22DCP Athlonix™ Graphite-Copper commutation Ø22mm 6.21 mNm

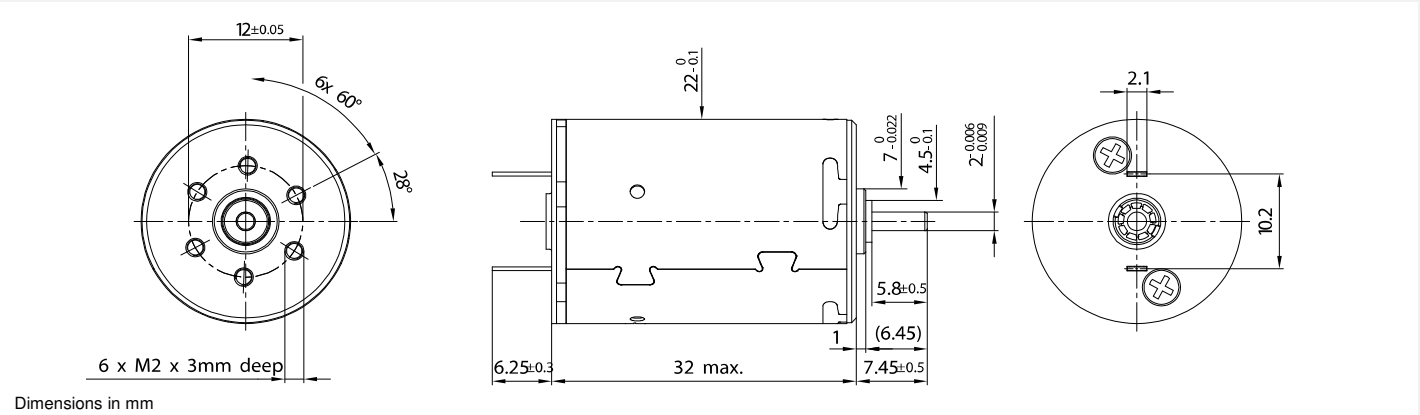


### 22DCP 32G1 **** .1

| Electrical Data | **** | 221P | 216P | 213P | 211P | 210P | 209P | |
|---|---|---|---|---|---|---|---|---|
| 1 Nominal Voltage | V | 3 | 6 | 9 | 12 | 15 | 18 | Volt |
| 2 No-Load Speed | $n_0$ | 8094 | 9574 | 9874 | 9598 | 9600 | 9211 | rpm |
| 3 No-Load Current | $I_0$ | 132.6 | 77.4 | 53.0 | 38.7 | 30.9 | 24.8 | mA |
| 4 Terminal Resistance | R | 0.9 | 2.2 | 4.3 | 8.0 | 12.3 | 18.8 | Ω |
| 5 Output Power | $P_{2max.}$ | 2.2 | 3.7 | 4.1 | 3.9 | 4.0 | 3.8 | W |
| 6 Stall Torque | mNm | 10.44 (1.48) | 15.6 (2.21) | 17.23 (2.45) | 17.1 (2.43) | 17.29 (2.45) | 16.94 (2.4) | mNm (oz-in) |
| 7 Efficiency | $h_{max.}$ | 63 | 69 | 71 | 71 | 71 | 70 | % |
| 8 Max Continuous Speed | $n_{e\ max.}$ | 10000 | 10000 | 10000 | 10000 | 10000 | 10000 | rpm |
| 9 Max Continuous Torque | $M_{e\ max.}$ | 5.13 (0.73) | 5.82 (0.83) | 6.04 (0.86) | 6.11 (0.87) | 6.14 (0.87) | 6.21 (0.88) | mNm (oz-in) |
| 10 Max Continuous Current | $I_{e\ max.}$ | 1.64 | 1.08 | 0.77 | 0.56 | 0.45 | 0.37 | A |
| 11 Back-EMF Constant | $k_E$ | 0.36 | 0.61 | 0.89 | 1.22 | 1.52 | 1.90 | mV/rpm |
| 12 Torque Constant | $k_M$ | 3.39 | 5.82 | 8.48 | 11.63 | 14.54 | 18.18 | mNm/A |
| 13 Motor Regulation | $R/k^2$ | 81.20 | 64.28 | 60.00 | 58.76 | 58.16 | 56.95 | $10^3$/Nms |
| 14 Friction Torque | $T_F$ | 0.45 (0.07) | 0.45 (0.07) | 0.45 (0.07) | 0.45 (0.07) | 0.45 (0.07) | 0.45 (0.07) | mNm (oz-in) |
| 15 Mechanical Time Constant | $\tau_m$ | 38.97 | 30.70 | 28.44 | 27.50 | 27.12 | 26.89 | ms |
| 16 Rotor Inertia | J | 4.80 | 4.78 | 4.74 | 4.68 | 4.66 | 4.72 | $g.cm^2$ |
| **General Data** | | | | | | | | |
| 17 Thermal Resistance (rotor/body) | $R_{th1}$ / $R_{th2}$ | 6/22 | | | | | | ℃/W |
| 18 Thermal Time Constant (rotor/stator) | $t_{w1}/t_{w2}$ | 9/550 | | | | | | S |
| 19 Operating Temperature Range: | $t_{w1}/t_{w2}$ | -30℃ to 85℃ (-22℉ to 185℉) | | | | | | ℃ (℉) |
| | rotor | 100℃ (212℉) | | | | | | ℃ (℉) |
| 20 Shaft Load Max.: | | With sleeve bearings | | | | | | |
| (5mm from bearing) | -radial | 1.5 (5.4) | | | | | | N (oz) |
| | -axial | 100 (359.6) | | | | | | N (oz) |
| 21 Shaft Play: | -radial | 0.03 (0.0012) | | | | | | mm (inch) |
| | -axial | 0.15 (0.0059) | | | | | | mm (inch) |
| 22 Weight | g | 58 (2.05) | | | | | | g (oz) |

* Also available with ball bearing

| Execution | | | |
|---|---|---|---|
| Gearbox | Single Shaft | MR2 | E9 |
| R22 | 4 | 5 | 6 |
| M22 | 1 | 2 | 3 |
| K24 | 7 | 8 | 9 |
| K27 | 1 | 2 | 3 |

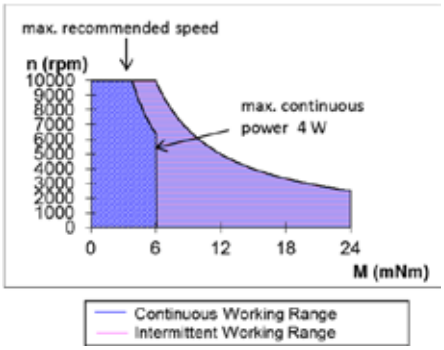


Note:
G1:standard commutation
G2:special commutation for double shaft version

V121616

## 22DCP Athlonix™ Graphite-Copper commutation Ø22mm 6.21 mNm

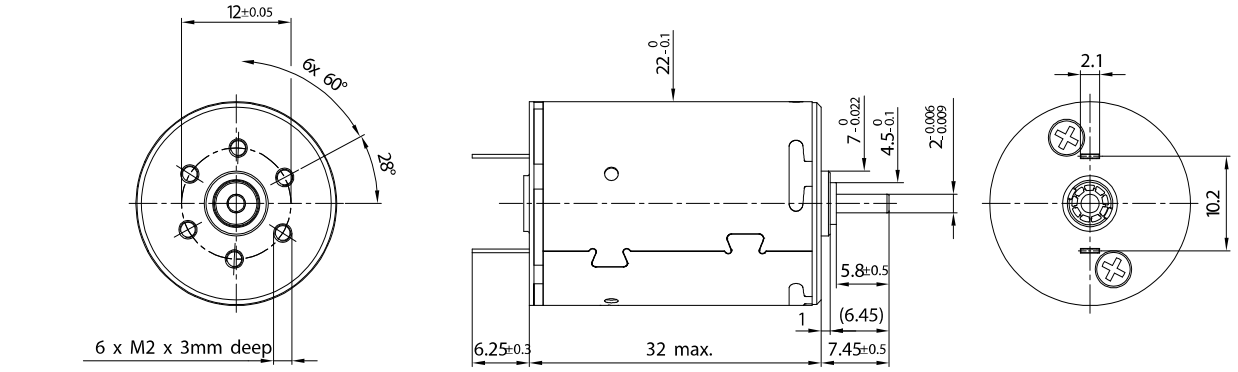


Dimensions in mm

### 22DCP 32G1 **** .1

| Electrical Data | **** | 212E | 211E | 210E | 209E | 208E | |
|---|---|---|---|---|---|---|---|
| 1 Nominal Voltage | V | 21 | 24 | 30 | 36 | 48 | Volt |
| 2 No-Load Speed | $n_0$ | 10,201 | 10,308 | 10,645 | 10,123 | 10,889 | rpm |
| 3 No-Load Current | $I_0$ | 23.5 | 20.8 | 17.2 | 13.6 | 11.0 | mA |
| 4 Terminal Resistance | R | 23.6 | 30.6 | 46.3 | 71.9 | 112.8 | Ω |
| 5 Output Power | $P_{2max.}$ | 4.0 | 4.1 | 4.2 | 3.9 | 4.3 | W |
| 6 Stall Torque | mNm | 16.56 (2.35) | 16.53 (2.35) | 16.53 (2.35) | 16.09 (2.28) | 17 (2.41) | mNm (oz-in) |
| 7 Efficiency | $h_{max.}$ | 70 | 70 | 70 | 70 | 70 | % |
| 8 Max Continuous Speed | $n_{e\ max.}$ | 10,000 | 10,000 | 10,000 | 10,000 | 10,000 | rpm |
| 9 Max Continuous Torque | $M_{e\ max.}$ | 5.81 (0.83) | 5.77 (0.82) | 5.67 (0.81) | 5.74 (0.82) | 5.69 (0.81) | mNm (oz-in) |
| 10 Max Continuous Current | $I_{e\ max.}$ | 0.33 | 0.29 | 0.23 | 0.19 | 0.15 | A |
| 11 Back-EMF Constant | $k_E$ | 2.00 | 2.27 | 2.74 | 3.46 | 4.29 | mV/rpm |
| 12 Torque Constant | $k_M$ | 19.14 | 21.64 | 26.20 | 33.03 | 41.01 | mNm/A |
| 13 Motor Regulation | $R/k^2$ | 64.5 | 65.3 | 67.4 | 65.89 | 67.07 | $10^3$/Nms |
| 14 Friction Torque | $T_F$ | 0.45 (0.07) | 0.45 (0.07) | 0.45 (0.07) | 0.45 (0.07) | 0.45 (0.07) | mNm (oz-in) |
| 15 Mechanical Time Constant | $\tau_m$ | 30.3 | 30.2 | 30.1 | 30.1 | 30.0 | ms |
| 16 Rotor Inertia | J | 4.70 | 4.63 | 4.47 | 4.56 | 4.48 | $g.cm^2$ |
| **General Data** | | | | | | | |
| 17 Thermal Resistance (rotor/body) | $R_{th1}$ / $R_{th2}$ | 6/22 | | | | | °C/W |
| 18 Thermal Time Constant (rotor/stator) | $t_{w1}/t_{w2}$ | 9/550 | | | | | S |
| 19 Operating Temperature Range: | $t_{w1}/t_{w2}$ | -30°C to 85°C (-22°F to 185°F) | | | | | °C (°F) |
| | rotor | 100°C (212°F) | | | | | °C (°F) |
| 20 Shaft Load Max.: | | With sleeve bearings | | | | | |
| (5mm from bearing) | -radial | 1.5 (5.4) | | | | | N (oz) |
| | -axial | 100 (359.6) | | | | | N (oz) |
| 21 Shaft Play: | -radial | 0.03 (0.0012) | | | | | mm (inch) |
| | -axial | 0.15 (0.0059) | | | | | mm (inch) |
| 22 Weight | g | 58 (2.05) | | | | | g (oz) |

* Also available with ball bearing

| Execution | | | |
|---|---|---|---|
| Gearbox | Single Shaft | MR2 | E9 |
| R22 | 4 | 5 | 6 |
| M22 | 1 | 2 | 3 |
| K24 | 7 | 8 | 9 |
| K27 | 1 | 2 | 3 |

Note:
G1:standard commutation
G2:special commutation for double shaft version

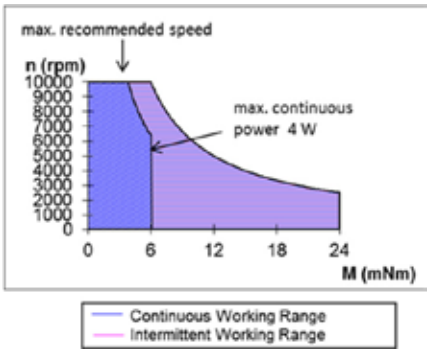


V121616

## 22DCP Athlonix™ Precious metal commutation Ø22mm 6.5 mNm

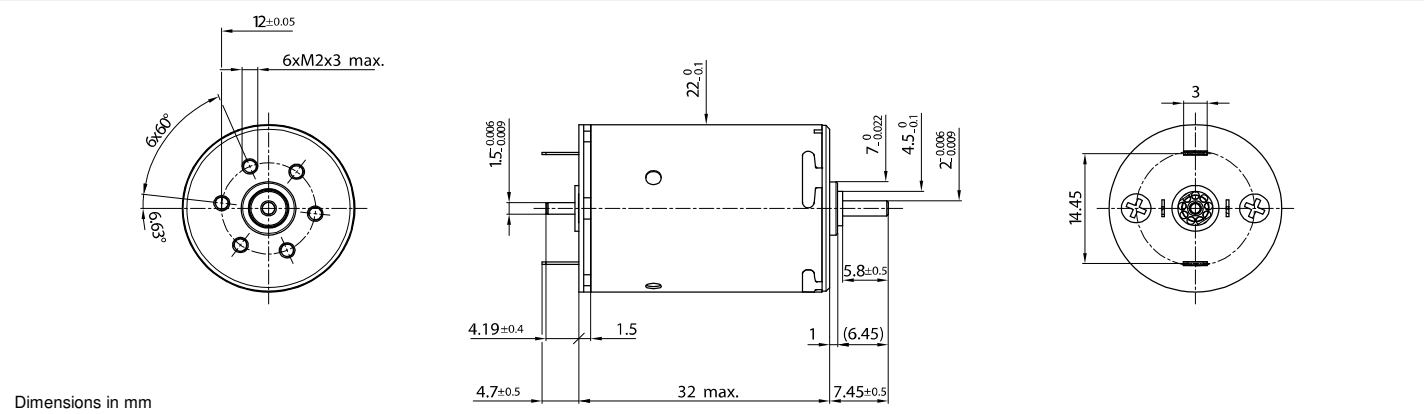


### 22DCP 32P2 **** .2

| Electrical Data | **** | 221P | 216P | 213P | 211P | 210P | 209P | |
|---|---|---|---|---|---|---|---|---|
| 1 Nominal Voltage | V | 3 | 6 | 9 | 12 | 15 | 18 | Volt |
| 2 No-Load Speed | $n_0$ | 8321 | 9739 | 10022 | 9741 | 9741 | 9348 | rpm |
| 3 No-Load Current | $I_0$ | 58.9 | 34.4 | 23.6 | 17.2 | 13.8 | 11.0 | mA |
| 4 Terminal Resistance | R | 0.7 | 2.0 | 4.1 | 7.8 | 12.1 | 18.6 | Ω |
| 5 Output Power | $P_{2max.}$ | 2.9 | 4.1 | 4.4 | 4.2 | 4.2 | 4.0 | W |
| 6 Stall Torque | mNm | 13.65 (1.94) | 17.47 (2.48) | 18.34 (2.6) | 17.81 (2.53) | 17.83 (2.53) | 17.37 (2.46) | mNm (oz-in) |
| 7 Efficiency | $h_{max.}$ | 77 | 80 | 80 | 80 | 80 | 80 | % |
| 8 Max Continuous Speed | $n_{e\ max.}$ | 10000 | 10000 | 10000 | 10000 | 10000 | 10000 | rpm |
| 9 Max Continuous Torque | $M_{e\ max.}$ | 6.09 (0.87) | 6.38 (0.91) | 6.45 (0.92) | 6.44 (0.92) | 6.45 (0.92) | 6.5 (0.93) | mNm (oz-in) |
| 10 Max Continuous Current | $I_{e\ max.}$ | 1.85 | 1.13 | 0.78 | 0.57 | 0.46 | 0.37 | A |
| 11 Back-EMF Constant | $k_E$ | 0.36 | 0.61 | 0.89 | 1.22 | 1.52 | 1.90 | mV/rpm |
| 12 Torque Constant | $k_M$ | 3.39 | 5.82 | 8.48 | 11.63 | 14.54 | 18.18 | mNm/A |
| 13 Motor Regulation | $R/k^2$ | 63.83 | 58.37 | 57.22 | 57.28 | 57.22 | 56.34 | $10^3$/Nms |
| 14 Friction Torque | $T_F$ | 0.2 (0.03) | 0.2 (0.03) | 0.2 (0.03) | 0.2 (0.03) | 0.2 (0.03) | 0.2 (0.03) | mNm (oz-in) |
| 15 Mechanical Time Constant | $\tau_m$ | 30.63 | 27.87 | 27.12 | 26.81 | 26.68 | 26.60 | ms |
| 16 Rotor Inertia | J | 4.80 | 4.78 | 4.74 | 4.68 | 4.66 | 4.72 | $g.cm^2$ |
| **General Data** | | | | | | | | |
| 17 Thermal Resistance (rotor/body) | $R_{th1}$ / $R_{th2}$ | 6/22 | | | | | | °C/W |
| 18 Thermal Time Constant (rotor/stator) | $t_{w1}/t_{w2}$ | 9/550 | | | | | | S |
| 19 Operating Temperature Range: | $t_{w1}/t_{w2}$ | -30°C to 85°C (-22°F to 185°F) | | | | | | °C (°F) |
| | rotor | 100°C (212°F) | | | | | | °C (°F) |
| 20 Shaft Load Max.: | | With sleeve bearings | | | | | | |
| (5mm from bearing) | -radial | 1.5 (5.4) | | | | | | N (oz) |
| | -axial | 100 (359.6) | | | | | | N (oz) |
| 21 Shaft Play: | -radial | 0.03 (0.0012) | | | | | | mm (inch) |
| | -axial | 0.15 (0.0059) | | | | | | mm (inch) |
| 22 Weight | g | 58 (2.05) | | | | | | g (oz) |

* Also available with ball bearing

| Execution | | | |
|---|---|---|---|
| Gearbox | Single Shaft | MR2 | E9 |
| R22 | 4 | 5 | 6 |
| M22 | 1 | 2 | 3 |
| K24 | 7 | 8 | 9 |
| K27 | 1 | 2 | 3 |

Note:
P1:standard commutation
P2:special commutation for double shaft version

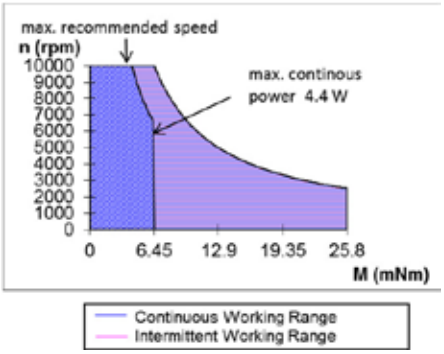


V121616

## 22DCP Athlonix™ Precious metal commutation Ø22mm 6.5 mNm

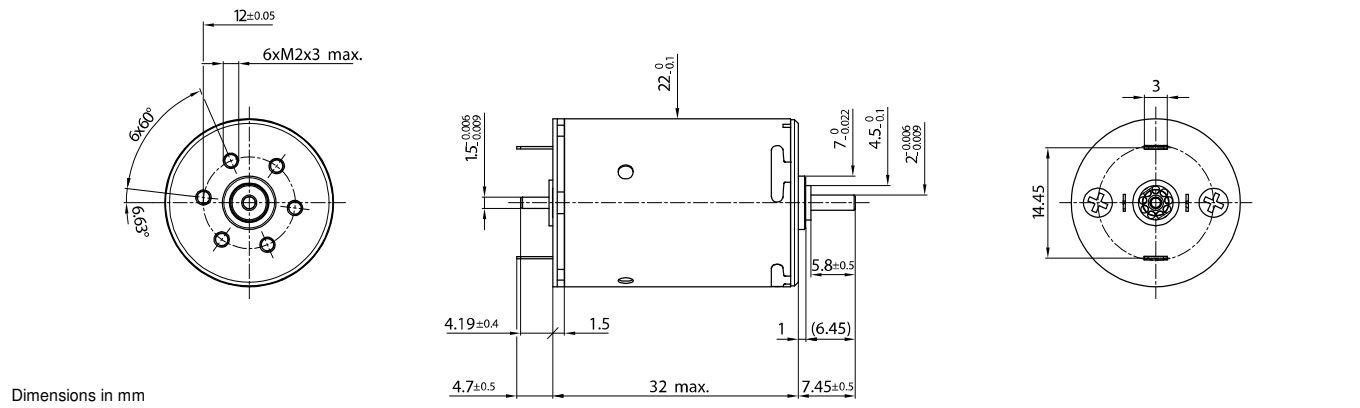


### 22DCP 32P2 **** .2

| Electrical Data | **** | 212E | 211E | 210E | 209E | 208E | |
|---|---|---|---|---|---|---|---|
| 1 Nominal Voltage | V | 21 | 24 | 30 | 36 | 48 | Volt |
| 2 No-Load Speed | $n_0$ | 10,357 | 10,465 | 10,806 | 10,281 | 11,049 | rpm |
| 3 No-Load Current | $I_0$ | 10.5 | 9.2 | 7.6 | 6.1 | 4.9 | mA |
| 4 Terminal Resistance | R | 23.4 | 30.4 | 46.1 | 71.7 | 112.6 | Ω |
| 5 Output Power | $P_{2max.}$ | 4.2 | 4.3 | 4.4 | 4.1 | 4.5 | W |
| 6 Stall Torque | mNm | 16.95 (2.41) | 16.89 (2.4) | 16.85 (2.39) | 16.39 (2.33) | 17.28 (2.45) | mNm (oz-in) |
| 7 Efficiency | $h_{max.}$ | 80 | 80 | 80 | 79 | 80 | % |
| 8 Max Continuous Speed | $n_{e\ max.}$ | 10,000 | 10,000 | 10,000 | 10,000 | 10,000 | rpm |
| 9 Max Continuous Torque | $M_{e\ max.}$ | 6.08 (0.86) | 6.04 (0.86) | 5.93 (0.84) | 6 (0.85) | 5.94 (0.85) | mNm (oz-in) |
| 10 Max Continuous Current | $I_{e\ max.}$ | 0.33 | 0.29 | 0.23 | 0.19 | 0.15 | A |
| 11 Back-EMF Constant | $k_E$ | 2.00 | 2.27 | 2.74 | 3.46 | 4.29 | mV/rpm |
| 12 Torque Constant | $k_M$ | 19.14 | 21.64 | 26.20 | 33.03 | 41.01 | mNm/A |
| 13 Motor Regulation | $R/k^2$ | 64.0 | 64.9 | 67.2 | 65.70 | 66.95 | $10^3$/Nms |
| 14 Friction Torque | $T_F$ | 0.2 (0.03) | 0.2 (0.03) | 0.2 (0.03) | 0.2 (0.03) | 0.2 (0.03) | mNm (oz-in) |
| 15 Mechanical Time Constant | $\tau_m$ | 30.1 | 30.0 | 30.0 | 30.0 | 30.0 | ms |
| 16 Rotor Inertia | J | 4.70 | 4.63 | 4.47 | 4.56 | 4.48 | $g.cm^2$ |
| **General Data** | | | | | | | |
| 17 Thermal Resistance (rotor/body) | $R_{th1}$ / $R_{th2}$ | 6/22 | | | | | ℃/W |
| 18 Thermal Time Constant (rotor/stator) | $t_{w1}/t_{w2}$ | 9/550 | | | | | S |
| 19 Operating Temperature Range: | $t_{w1}/t_{w2}$ | -30℃ to 85℃ (-22℉ to 185℉) | | | | | ℃ (℉) |
| | rotor | 100℃ (212℉) | | | | | ℃ (℉) |
| 20 Shaft Load Max.: | | With sleeve bearings | | | | | |
| (5mm from bearing) | -radial | 1.5 (5.4) | | | | | N (oz) |
| | -axial | 100 (359.6) | | | | | N (oz) |
| 21 Shaft Play: | -radial | 0.03 (0.0012) | | | | | mm (inch) |
| | -axial | 0.15 (0.0059) | | | | | mm (inch) |
| 22 Weight | g | 58 (2.05) | | | | | g (oz) |

* Also available with ball bearing

| Execution | | | |
|---|---|---|---|
| Gearbox | Single Shaft | MR2 | E9 |
| R22 | 4 | 5 | 6 |
| M22 | 1 | 2 | 3 |
| K24 | 7 | 8 | 9 |
| K27 | 1 | 2 | 3 |

Note:
P1:standard commutation
P2:special commutation for double shaft version

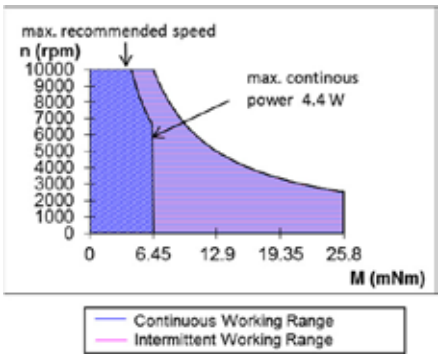


V121616

## 22S28 Precious metal commutation Ø22mm 4.1 mNm

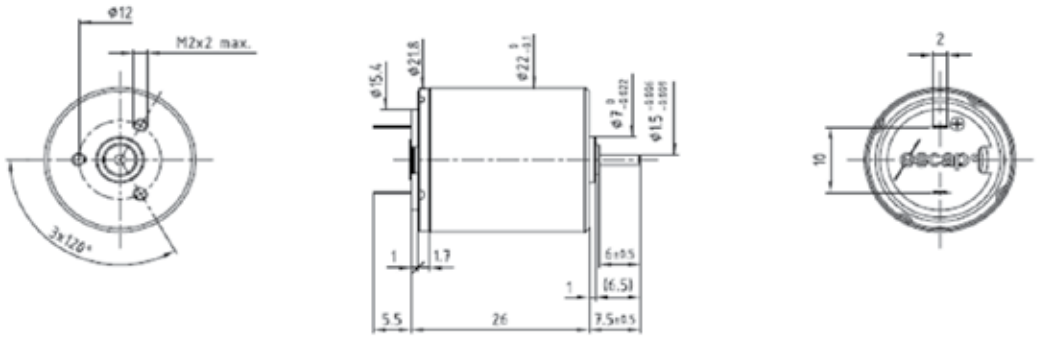


Dimensions in mm

### 22S28 **** .1

| Electrical Data | **** | 208E | 205E | |
|---|---|---|---|---|
| 1 Nominal Voltage | V | 15 | 24 | Volt |
| 2 No-Load Speed | $n_0$ | 9,600 | 7,940 | rpm |
| 3 No-Load Current | $I_0$ | 6.0 | 2.8 | mA |
| 4 Terminal Resistance | R | 35.0 | 140.0 | Ω |
| 5 Output Power | $P_{2max.}$ | 2.5 | 2.4 | W |
| 6 Stall Torque | mNm | 6.3 (0.9) | 4.9 (0.7) | mNm (oz-in) |
| 7 Efficiency | $h_{max.}$ | 78 | 76 | % |
| 8 Max Continuous Speed | $n_{e\ max.}$ | 10,000 | 10,000 | rpm |
| 9 Max Continuous Torque | $M_{e\ max.}$ | 4.1 (0.56) | 3.9 (0.56) | mNm (oz-in) |
| 10 Max Continuous Current | $I_{e\ max.}$ | 0.29 | 0.15 | A |
| 11 Back-EMF Constant | $k_E$ | 1.54 | 2.97 | mV/rpm |
| 12 Torque Constant | $k_M$ | 14.70 | 28.40 | mNm/A |
| 13 Motor Regulation | $R/k^2$ | 160.0 | 170.0 | $10^3$/Nms |
| 14 Friction Torque | $T_F$ | 0.09 (0.02) | 0.08 (0.02) | mNm (oz-in) |
| 15 Rotor Inductance | L | 0.92 | 3.60 | mH |
| 16 Mechanical Time Constant | $t_m$ | 25.6 | 25.5 | ms |
| 17 Rotor Inertia | J | 1.60 | 1.50 | $g.cm^2$ |
| **General Data** | | | | |
| 18 Thermal Resistance (rotor/body) | $R_{th1}$ / $R_{th2}$ | 5/30 | | °C/W |
| 19 Thermal Time Constant (rotor/stator) | $t_{w1}/t_{w2}$ | 5/480 | | S |
| 20 Operating Temperature Range: | motor | -30°C to 85°C (-22°F to 185°F) | | °C (°F) |
| | rotor | 100°C (212°F) | | °C (°F) |
| 21 Shaft Load Max.: | | With sleeve bearings | | |
| (5mm from bearing) | -radial | 1.5 (5.4) | | N (oz) |
| | -axial | 100 (359.6) | | N (oz) |
| 22 Shaft Play: | -radial | <0.03 (0.0012) | | mm (inch) |
| | -axial | 0.15 (0.0059) | | mm (inch) |
| 23 Weight | g | 49 (1.73) | | g (oz) |

| Execution Table | | |
|---|---|---|
| Gearbox | Single Shaft | MR2 |
| R22 | Upon Request | Upon Request |
| M22 | Upon Request | Upon Request |
| K24 | Upon Request | Upon Request |
| K27 | Upon Request | Upon Request |

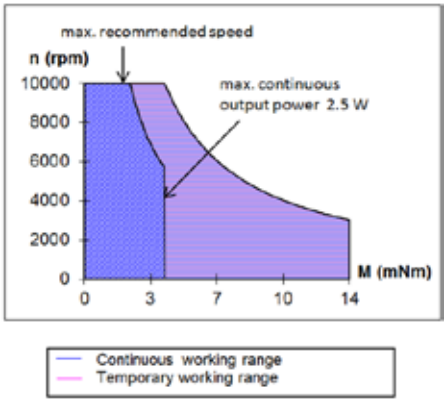


V121616

## 22S78 Precious metal commutation Ø22mm 8.9 mNm

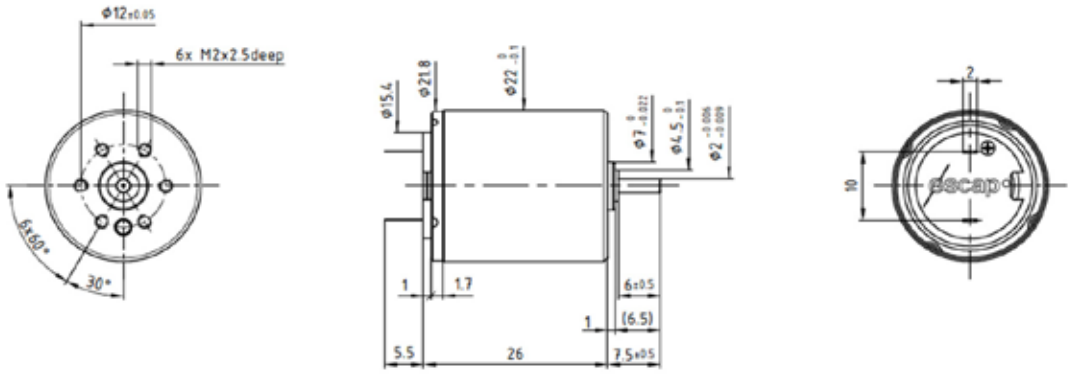


Dimensions in mm

### 22S78 **** .1

| Electrical Data | **** | 210E | 208E | |
|---|---|---|---|---|
| 1 Nominal Voltage | V | 18 | 24 | Volt |
| 2 No-Load Speed | $n_0$ | 7,780 | 8,550 | rpm |
| 3 No-Load Current | $I_0$ | 4.5 | 3.3 | mA |
| 4 Terminal Resistance | R | 18.0 | 35.0 | Ω |
| 5 Output Power | $P_{2max.}$ | 5.5 | 4.6 | W |
| 6 Stall Torque | mNm | 22 (3.12) | 18.3 (2.6) | mNm (oz-in) |
| 7 Efficiency | $h_{max.}$ | 87 | 87 | % |
| 8 Max Continuous Speed | $n_{e\ max.}$ | 10,000 | 10,000 | rpm |
| 9 Max Continuous Torque | $M_{e\ max.}$ | 8.9 (1.1) | 7.7 (1.1) | mNm (oz-in) |
| 10 Max Continuous Current | $I_{e\ max.}$ | 0.41 | 0.29 | A |
| 11 Back-EMF Constant | $k_E$ | 2.30 | 2.80 | mV/rpm |
| 12 Torque Constant | $k_M$ | 22.00 | 26.70 | mNm/A |
| 13 Motor Regulation | $R/k^2$ | 37.0 | 49.0 | $10^3$/Nms |
| 14 Friction Torque | $T_F$ | 0.09 (0.02) | 0.09 (0.02) | mNm (oz-in) |
| 15 Rotor Inductance | L | 0.50 | 0.92 | mH |
| 16 Mechanical Time Constant | $t_m$ | 7.0 | 7.8 | ms |
| 17 Rotor Inertia | J | 1.90 | 1.60 | $g.cm^2$ |
| **General Data** | | | | |
| 18 Thermal Resistance (rotor/body) | $R_{th1}$ / $R_{th2}$ | 5/30 | | °C/W |
| 19 Thermal Time Constant (rotor/stator) | $t_{w1}/t_{w2}$ | 5/480 | | S |
| 20 Operating Temperature Range: | motor | -30°C to 85°C (-22°F to 185°F) | | °C (°F) |
| | rotor | 100°C (212°F) | | °C (°F) |
| 21 Shaft Load Max.: | | With sleeve bearings | | |
| (5mm from bearing) | -radial | 1.5 (5.4) | | N (oz) |
| | -axial | 100 (359.6) | | N (oz) |
| 22 Shaft Play: | -radial | <0.03 (0.0012) | | mm (inch) |
| | -axial | 0.15 (0.0059) | | mm (inch) |
| 23 Weight | g | 49 (1.73) | | g (oz) |

| Execution Table | |
|---|---|
| Gearbox | Single Shaft |
| R22 | 1 |

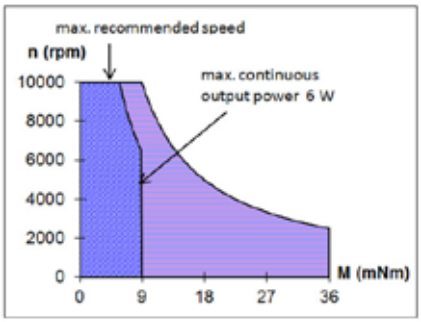


Continuous working range
Temporary working range

V121616

## 22V28 Precious metal commutation Ø22mm 9.7 mNm

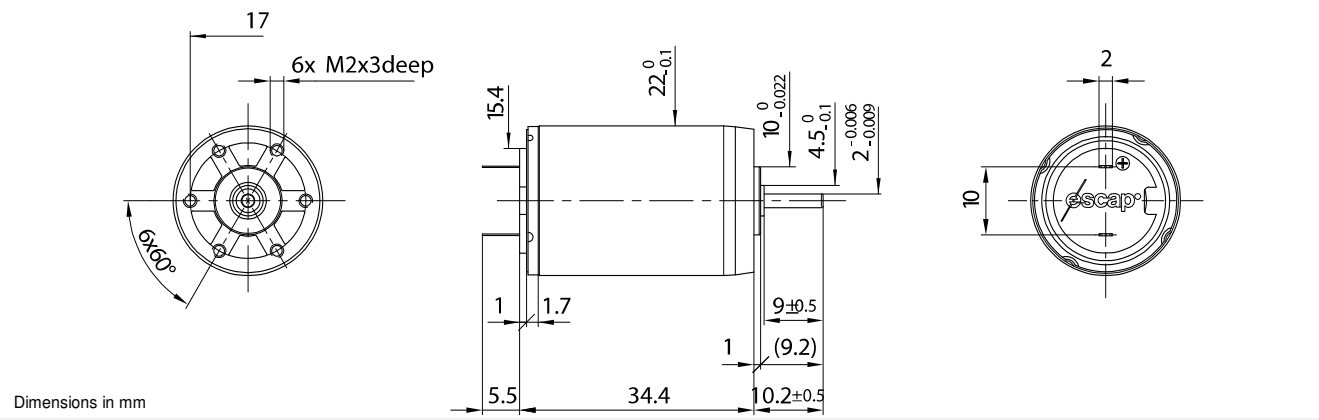


### 22V28 **** .201

| Electrical Data | **** | 213P | 216E | 213E | 210E | 208E | |
|---|---|---|---|---|---|---|---|
| 1 Nominal Voltage | V | 6 | 9 | 12 | 15 | 24 | Volt |
| 2 No-Load Speed | $n_0$ | 7,100 | 6,725 | 7,630 | 7,550 | 6,340 | rpm |
| 3 No-Load Current | $I_0$ | 15.0 | 9.0 | 7.6 | 6.0 | 3.2 | mA |
| 4 Terminal Resistance | R | 3.0 | 6.7 | 11.9 | 24.5 | 75.0 | Ω |
| 5 Output Power | $P_{2max.}$ | 4.1 | 4.4 | 3.8 | 3.3 | 3.6 | W |
| 6 Stall Torque | mNm | 16 (2.27) | 17.1 (2.43) | 15 (2.13) | 11.5 (1.63) | 11.5 (1.63) | mNm (oz-in) |
| 7 Efficiency | $h_{max.}$ | 83 | 84 | 83 | 81 | 81 | % |
| 8 Max Continuous Speed | $n_{e\ max.}$ | 10,000 | 10,000 | 10,000 | 10,000 | 10,000 | rpm |
| 9 Max Continuous Torque | $M_{e\ max.}$ | 9.1 (1.38) | 9.7 (1.38) | 8.5 (1.21) | 7.4 (1.05) | 8.1 (1.15) | mNm (oz-in) |
| 10 Max Continuous Current | $I_{e\ max.}$ | 1.15 | 0.77 | 0.58 | 0.40 | 0.23 | A |
| 11 Back-EMF Constant | $k_E$ | 0.84 | 1.33 | 1.56 | 1.97 | 3.75 | mV/rpm |
| 12 Torque Constant | $k_M$ | 8.00 | 12.70 | 14.90 | 18.80 | 35.80 | mNm/A |
| 13 Motor Regulation | $R/k^2$ | 47.0 | 42.0 | 54.0 | 69.00 | 58.00 | $10^3$/Nms |
| 14 Friction Torque | $T_F$ | 0.12 (0.02) | 0.12 (0.02) | 0.11 (0.02) | 0.11 (0.02) | 0.11 (0.02) | mNm (oz-in) |
| 15 Rotor Inductance | L | 0.15 | 0.50 | 0.55 | 0.80 | 3.30 | mH |
| 16 Mechanical Time Constant | $t_m$ | 15.0 | 16.4 | 17.3 | 20.0 | 13.9 | ms |
| 17 Rotor Inertia | J | 3.20 | 3.90 | 3.20 | 2.90 | 2.40 | $g.cm^2$ |
| **General Data** | | | | | | | |
| 18 Thermal Resistance (rotor/body) | $R_{th1}$ / $R_{th2}$ | | | 7/16 | | | °C/W |
| 19 Thermal Time Constant (rotor/stator) | $t_{w1}/t_{w2}$ | | | 8/460 | | | S |
| 20 Operating Temperature Range: | motor | | | -30°C to 85°C (-22°F to 185°F) | | | °C (°F) |
| | rotor | | | 100°C (212°F) | | | °C (°F) |
| 21 Shaft Load Max.: | | | | With sleeve bearings | | | |
| (5mm from bearing) | -radial | | | 3.0 (10.8) | | | N (oz) |
| | -axial | | | 150 (539.5) | | | N (oz) |
| 22 Shaft Play: | -radial | | | <0.03 (0.0012) | | | mm (inch) |
| | -axial | | | 0.15 (0.0059) | | | mm (inch) |
| 23 Weight | g | | | 68 (2.4) | | | g (oz) |

| Execution Table | | | | |
|---|---|---|---|---|
| Gearbox | Single Shaft | F16 | E9 | MR2 |
| R22 | 202 | 202 | 225 | Upon Request |
| M22 | 201 | 201 | 204 | Upon Request |
| K24 | 202 | 202 | 225 | Upon Request |
| K27 | 202 | 202 | 225 | Upon Request |

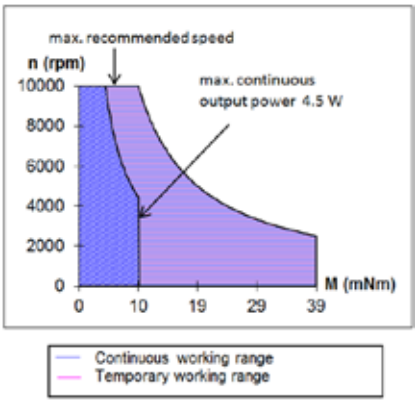


V121616

## 22N78 Athlonix™ Precious metal commutation Ø22mm 15.7 mNm

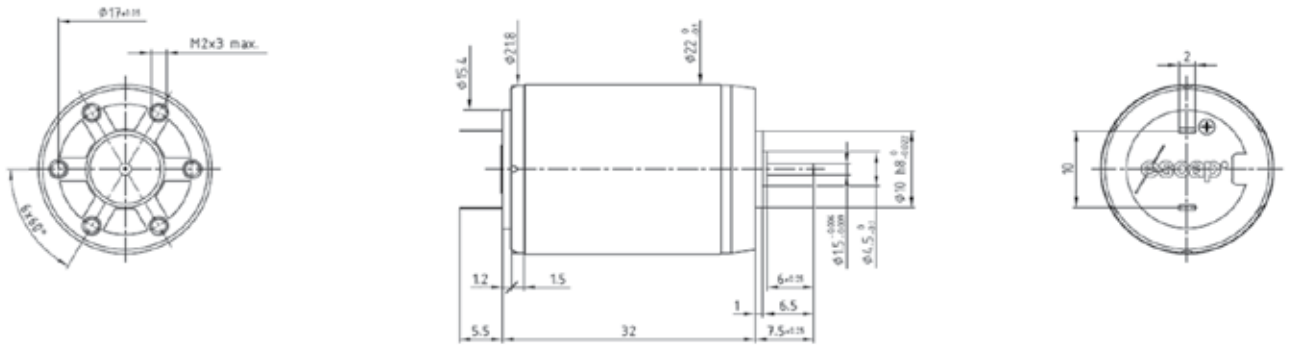


Dimensions in mm

### 22N78 **** .1001

| Electrical Data | **** | 319P | 313P | 311P | 216E | 215E | 208E | |
|---|---|---|---|---|---|---|---|---|
| 1 Nominal Voltage | V | 6 | 9 | 12 | 18 | 24 | 48 | Volt |
| 2 No-Load Speed | $n_0$ | 8,660 | 6,860 | 7,280 | 8,250 | 9,075 | 6,350 | rpm |
| 3 No-Load Current | $I_0$ | 28.0 | 10.0 | 11.0 | 6.0 | 5.0 | 0.0 | mA |
| 4 Terminal Resistance | R | 0.6 | 2.5 | 3.9 | 7.7 | 11.0 | 107.0 | Ω |
| 5 Output Power | $P_{2max.}$ | 13.0 | 12.0 | 12.0 | 11.3 | 11.5 | 10.0 | W |
| 6 Stall Torque | mNm | 66 (9.35) | 45 (6.38) | 48 (6.8) | 49 (6.94) | 55 (7.79) | 32 (4.54) | mNm (oz-in) |
| 7 Efficiency | $h_{max.}$ | 90 | 90 | 88 | 90 | 91 | 91 | % |
| 8 Max Continuous Speed | $n_{e\ max.}$ | 10,000 | 10,000 | 10,000 | 10,000 | 10,000 | 10,000 | rpm |
| 9 Max Continuous Torque | $M_{e\ max.}$ | 15.7 (2.06) | 14.5 (2.06) | 14.8 (2.1) | 13.8 (1.96) | 14.5 (2.06) | 12.9 (1.83) | mNm (oz-in) |
| 10 Max Continuous Current | $I_{e\ max.}$ | 2.40 | 1.18 | 0.95 | 0.67 | 0.58 | 0.18 | A |
| 11 Back-EMF Constant | $k_E$ | 0.69 | 1.31 | 1.64 | 2.18 | 2.64 | 7.54 | mV/rpm |
| 12 Torque Constant | $k_M$ | 6.60 | 12.50 | 15.70 | 20.80 | 25.20 | 72.00 | mNm/A |
| 13 Motor Regulation | $R/k^2$ | 13.8 | 16.0 | 15.8 | 17.80 | 17.32 | 20.64 | $10^3$/Nms |
| 14 Friction Torque | $T_F$ | 0.07 (0.01) | 0.25 (0.04) | 0.11 (0.02) | 0.12 (0.02) | 0.12 (0.02) | 0.07 (0.01) | mNm (oz-in) |
| 15 Rotor Inductance | L | 0.04 | 0.16 | 0.25 | 0.50 | 0.60 | 7.00 | mH |
| 16 Mechanical Time Constant | $t_m$ | 6.7 | 7.0 | 6.6 | 8.4 | 7.8 | 6.9 | ms |
| 17 Rotor Inertia | J | 4.90 | 4.39 | 4.20 | 4.74 | 4.50 | 3.32 | $g.cm^2$ |
| **General Data** | | | | | | | | |
| 18 Thermal Resistance (rotor/body) | $R_{th1}$ / $R_{th2}$ | 6/22 | | | | | | °C/W |
| 19 Thermal Time Constant (rotor/stator) | $t_{w1}/t_{w2}$ | 9/550 | | | | | | S |
| 20 Operating Temperature Range: | motor | -30°C to 85°C (-22°F to 185°F) | | | | | | °C (°F) |
| | rotor | 100°C (212°F) | | | | | | °C (°F) |
| 21 Shaft Load Max.: | | With sleeve bearings | | | | | | |
| (5mm from bearing) | -radial | 3.0 (10.8) | | | | | | N (oz) |
| | -axial | 150 (539.5) | | | | | | N (oz) |
| 22 Shaft Play: | -radial | <0.03 (0.0012) | | | | | | mm (inch) |
| | -axial | 0.15 (0.0059) | | | | | | mm (inch) |
| 23 Weight | g | 53 (1.87) | | | | | | g (oz) |

| Execution Table | | | |
|---|---|---|---|
| Gearbox | Single Shaft | MR2 | E9 |
| R22 | 1001 | 1008 | 1005 |
| M22 | 1001 | 1008 | 1005 |
| K24 | 1001 | 1008 | 1005 |
| K27 | 1001 | 1008 | 1005 |

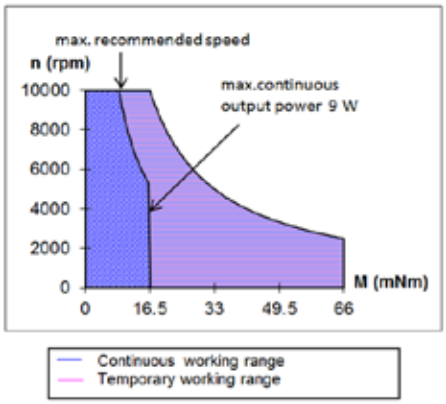


V121616

## 23GST2R82 Graphite-Copper commutation Ø23mm 22 mNm

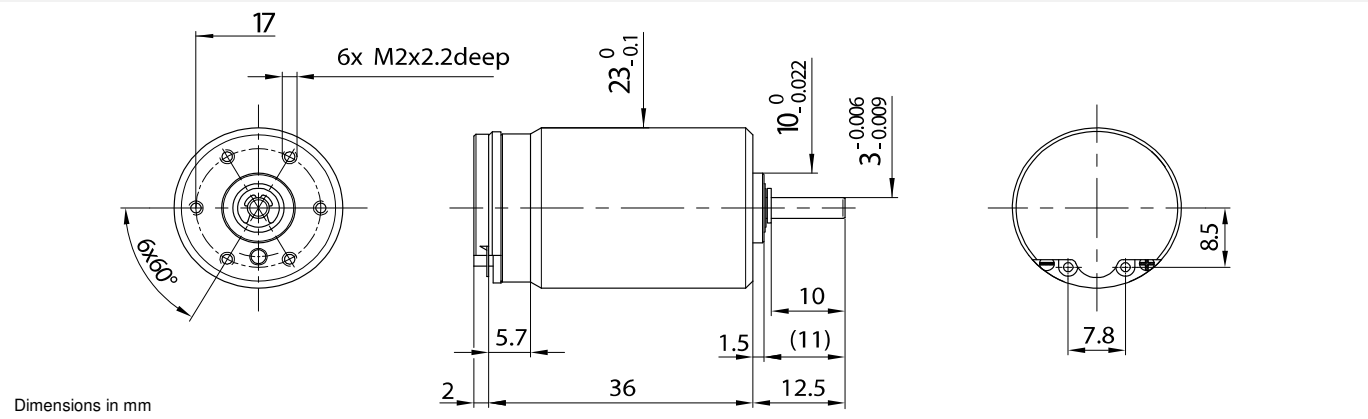


### 23GST2R82 **** .1

| Electrical Data | **** | 216P | 216E | |
|---|---|---|---|---|
| 1 Nominal Voltage | V | 12 | 24 | Volt |
| 2 No-Load Speed | $n_0$ | 8,690 | 9,010 | rpm |
| 3 No-Load Current | $I_0$ | 90.0 | 60.0 | mA |
| 4 Terminal Resistance | R | 2.0 | 6.9 | Ω |
| 5 Output Power | $P_{2max.}$ | 17.2 | 18.0 | W |
| 6 Stall Torque | mNm | 80 (11.33) | 87 (12.33) | mNm (oz-in) |
| 7 Efficiency | $h_{max.}$ | 77 | 76 | % |
| 8 Max Continuous Speed | $n_{e\ max.}$ | 10,000 | 10,000 | rpm |
| 9 Max Continuous Torque | $M_{e\ max.}$ | 21 (3.12) | 22 (3.12) | mNm (oz-in) |
| 10 Max Continuous Current | $I_{e\ max.}$ | 1.70 | 0.90 | A |
| 11 Back-EMF Constant | $k_E$ | 1.36 | 2.62 | mV/rpm |
| 12 Torque Constant | $k_M$ | 13.00 | 25.00 | mNm/A |
| 13 Motor Regulation | $R/k^2$ | 12.0 | 11.0 | $10^3$/Nms |
| 14 Friction Torque | $T_F$ | 1.17 (0.17) | 1.5 (0.22) | mNm (oz-in) |
| 15 Rotor Inductance | L | 0.08 | 0.30 | mH |
| 16 Mechanical Time Constant | $t_m$ | 5.6 | 5.2 | ms |
| 17 Rotor Inertia | J | 4.70 | 4.70 | $g.cm^2$ |
| **General Data** | | | | |
| 18 Thermal Resistance (rotor/body) | $R_{th1}$ / $R_{th2}$ | 7/16 | | °C/W |
| 19 Thermal Time Constant (rotor/stator) | $t_{w1}/t_{w2}$ | 12/460 | | S |
| 20 Operating Temperature Range: | motor | -30°C to 85°C (-22°F to 185°F) | | °C (°F) |
| | rotor | 100°C (212°F) | | °C (°F) |
| 21 Shaft Load Max.: | | With ball bearings | | |
| (5mm from bearing) | -radial | 6.0 (21.6) | | N (oz) |
| | -axial | 250 (899.2) | | N (oz) |
| 22 Shaft Play: | -radial | <0.03 (0.0012) | | mm (inch) |
| | -axial | 0.15 (0.0059) | | mm (inch) |
| 23 Weight | g | 80 (2.83) | | g (oz) |

**Execution Table**

| Gearbox | Single Shaft | E9 | MR2 |
|---|---|---|---|
| R22 | 2 | Upon Request | Upon Request |
| M22 | 2 | Upon Request | 8 |
| K27 | 2 | Upon Request | Upon Request |

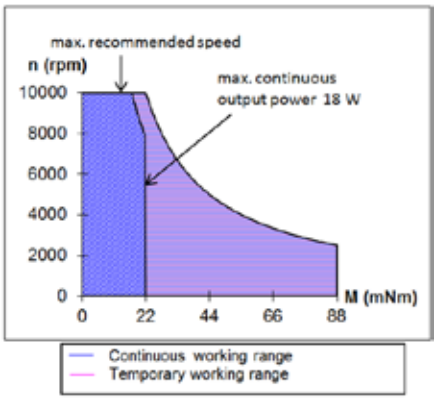


V121616

## 24DCT Athlonix™ Graphite-Copper commutation Ø24mm 14.47 mNm

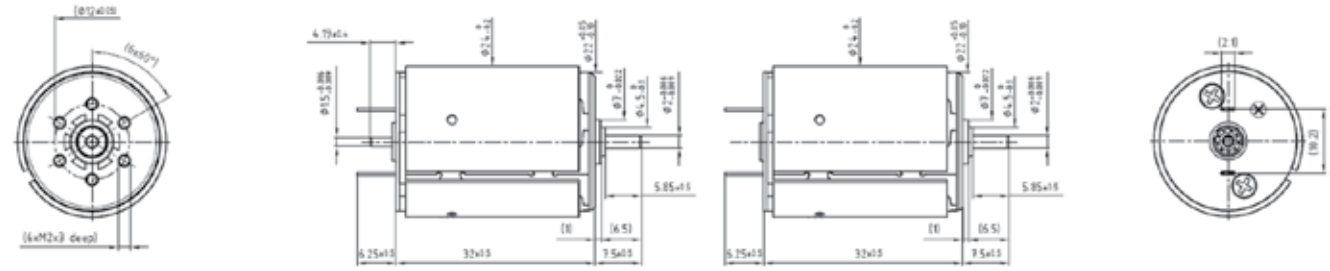

Dimensions in mm

### 24DCT 32G1/G2 **** .*

| Electrical Data | **** | 226P | 221P | 216P | 215P | 213P | 212P | |
|---|---|---|---|---|---|---|---|---|
| 1 Nominal Voltage | V | 3 | 6 | 9 | 12 | 15 | 18 | Volt |
| 2 No-Load Speed | $n_0$ | 5651 | 7324 | 6414 | 7613 | 7342 | 7342 | rpm |
| 3 No-Load Current | $I_0$ | 90.3 | 58.0 | 33.9 | 30.1 | 23.2 | 19.3 | mA |
| 4 Terminal Resistance | R | 0.6 | 0.9 | 2.2 | 2.7 | 4.3 | 6.1 | Ω |
| 5 Output Power | $P_{2max.}$ | 3.6 | 7.1 | 6.9 | 8.8 | 8.7 | 8.8 | W |
| 6 Stall Torque | mNm | 25.95 (3.68) | 49.3 (6.99) | 54.54 (7.73) | 66 (9.35) | 66.88 (9.48) | 67.8 (9.61) | mNm (oz-in) |
| 7 Efficiency | $\eta_{max.}$ | 76 | 82 | 83 | 84 | 84 | 84 | % |
| 8 Max Continuous Speed | $n_{e\ max.}$ | 10000 | 10000 | 10000 | 10000 | 10000 | 10000 | rpm |
| 9 Max Continuous Torque | $M_{e\ max.}$ | 10.07 (1.43) | 12.29 (1.75) | 13.87 (1.97) | 14.01 (1.99) | 14.37 (2.04) | 14.47 (2.05) | mNm (oz-in) |
| 10 Max Continuous Current | $I_{e\ max.}$ | 2.11 | 1.64 | 1.07 | 0.96 | 0.76 | 0.64 | A |
| 11 Back-EMF Constant | $k_E$ | 0.52 | 0.81 | 1.39 | 1.57 | 2.03 | 2.44 | mV/rpm |
| 12 Torque Constant | $k_M$ | 4.98 | 7.75 | 13.29 | 14.95 | 19.38 | 23.26 | mNm/A |
| 13 Motor Regulation | $R/k^2$ | 22.80 | 15.56 | 12.31 | 12.08 | 11.49 | 11.34 | $10^3$/Nms |
| 14 Friction Torque | $T_F$ | 0.45 (0.07) | 0.45 (0.07) | 0.45 (0.07) | 0.45 (0.07) | 0.45 (0.07) | 0.45 (0.07) | mNm (oz-in) |
| 15 Mechanical Time Constant | $\tau_m$ | 10.78 | 7.47 | 5.88 | 5.70 | 5.45 | 5.33 | ms |
| 16 Rotor Inertia | J | 4.73 | 4.80 | 4.78 | 4.72 | 4.74 | 4.70 | $g.cm^2$ |
| **General Data** | | | | | | | | |
| 17 Thermal Resistance (rotor/body) | $R_{th1}$ / $R_{th2}$ | 6/22 | | | | | | °C/W |
| 18 Thermal Time Constant (rotor/stator) | $t_{w1}/t_{w2}$ | 9/550 | | | | | | S |
| 19 Operating Temperature Range: | $t_{w1}/t_{w2}$ | -30°C to 85°C (-22°F to 185°F) | | | | | | °C (°F) |
| | rotor | 100°C (212°F) | | | | | | °C (°F) |
| 20 Shaft Load Max.: | | With sleeve bearings | | | | | | |
| (5mm from bearing) | -radial | 3 (10.79) | | | | | | N (oz) |
| | -axial | 100 (359.6) | | | | | | N (oz) |
| 21 Shaft Play: | -radial | 0.03 (0.0012) | | | | | | mm (inch) |
| | -axial | 0.15 (0.0059) | | | | | | mm (inch) |
| 22 Weight | g | 72 (2.54) | | | | | | g (oz) |

* Also available with ball bearing

| Execution | | | |
|---|---|---|---|
| Gearbox | Single Shaft | MR2 | E9 |
| R22 | 4 | 5 | 6 |
| M22 | 1 | 2 | 3 |
| K24 | 7 | 8 | 9 |
| K27 | 1 | 2 | 3 |

Note:
G1:standard commutation
G2:special commutation for double shaft version

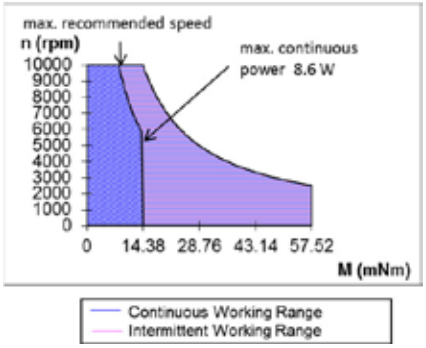


V121616

## 24DCT Athlonix™ Graphite-Copper commutation Ø24mm 14.47 mNm

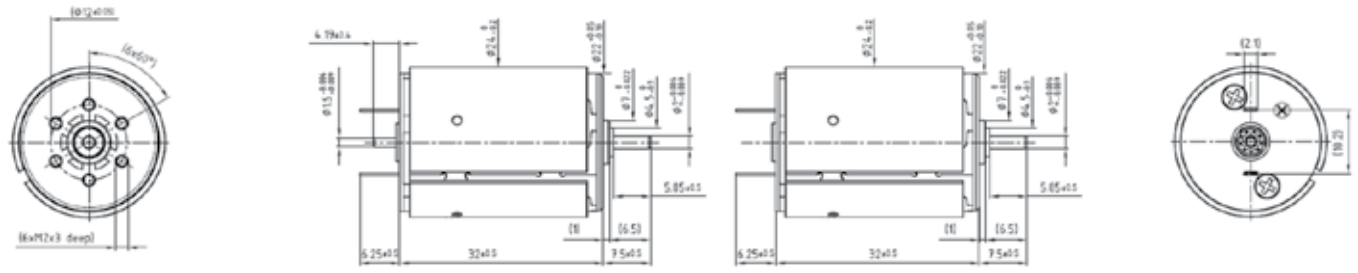

Dimensions in mm

### 24DCT 32G1/G2 **** .*

| Electrical Data | **** | 215E | 214E | 213E | 212E | 210E | |
|---|---|---|---|---|---|---|---|
| 1 Nominal Voltage | V | 21 | 24 | 30 | 36 | 48 | Volt |
| 2 No-Load Speed | $n_0$ | 6952 | 7048 | 7810 | 7810 | 7602 | rpm |
| 3 No-Load Current | $I_0$ | 15.7 | 13.9 | 12.4 | 10.3 | 7.5 | mA |
| 4 Terminal Resistance | R | 10.1 | 13.0 | 16.4 | 23.6 | 46.3 | Ω |
| 5 Output Power | $P_{2max.}$ | 7.7 | 7.8 | 9.0 | 9.0 | 8.4 | W |
| 6 Stall Torque | mNm | 59.2 (8.39) | 59.34 (8.41) | 66.32 (9.4) | 66.15 (9.37) | 61.6 (8.73) | mNm (oz-in) |
| 7 Efficiency | $\eta_{max.}$ | 83 | 83 | 84 | 84 | 84 | % |
| 8 Max Continuous Speed | $n_{e\ max.}$ | 10000 | 10000 | 10000 | 10000 | 10000 | rpm |
| 9 Max Continuous Torque | $M_{e\ max.}$ | 13.88 (1.97) | 13.8 (1.96) | 13.86 (1.97) | 13.84 (1.97) | 13.53 (1.92) | mNm (oz-in) |
| 10 Max Continuous Current | $I_{e\ max.}$ | 0.50 | 0.44 | 0.39 | 0.32 | 0.23 | A |
| 11 Back-EMF Constant | $k_E$ | 3.00 | 3.38 | 3.82 | 4.58 | 6.27 | mV/rpm |
| 12 Torque Constant | $k_M$ | 28.63 | 32.27 | 36.44 | 43.72 | 59.86 | mNm/A |
| 13 Motor Regulation | $R/k^2$ | 12.30 | 12.44 | 12.33 | 12.36 | 12.92 | $10^3$/Nms |
| 14 Friction Torque | $T_F$ | 0.45 (0.07) | 0.45 (0.07) | 0.45 (0.07) | 0.45 (0.07) | 0.45 (0.07) | mNm (oz-in) |
| 15 Mechanical Time Constant | $\tau_m$ | 5.91 | 5.87 | 5.84 | 5.81 | 5.77 | ms |
| 16 Rotor Inertia | J | 4.81 | 4.72 | 4.74 | 4.70 | 4.47 | $g.cm^2$ |
| **General Data** | | | | | | | |
| 17 Thermal Resistance (rotor/body) | $R_{th1}$ / $R_{th2}$ | 6/22 | | | | | °C/W |
| 18 Thermal Time Constant (rotor/stator) | $t_{w1}/t_{w2}$ | 9/550 | | | | | S |
| 19 Operating Temperature Range: | $t_{w1}/t_{w2}$ | -30°C to 85°C (-22°F to 185°F) | | | | | °C (°F) |
| | rotor | 100°C (212°F) | | | | | °C (°F) |
| 20 Shaft Load Max.: | | With sleeve bearings | | | | | |
| (5mm from bearing) | -radial | 3 (10.79) | | | | | N (oz) |
| | -axial | 100 (359.6) | | | | | N (oz) |
| 21 Shaft Play: | -radial | 0.03 (0.0012) | | | | | mm (inch) |
| | -axial | 0.15 (0.0059) | | | | | mm (inch) |
| 22 Weight | g | 72 (2.54) | | | | | g (oz) |

* Also available with ball bearing

| Execution | | | |
|---|---|---|---|
| Gearbox | Single Shaft | MR2 | E9 |
| R22 | 4 | 5 | 6 |
| M22 | 1 | 2 | 3 |
| K24 | 7 | 8 | 9 |
| K27 | 1 | 2 | 3 |

Note:
G1:standard commutation
G2:special commutation for double shaft version

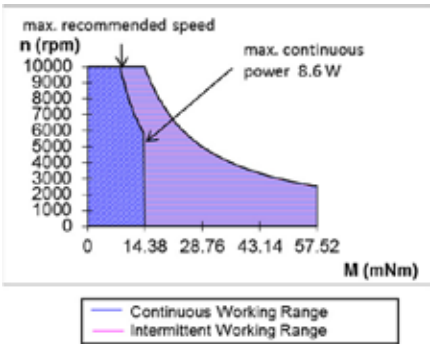


V121616

## 24DCT Athlonix™ Precious metal commutation Ø24mm 14.97 mNm

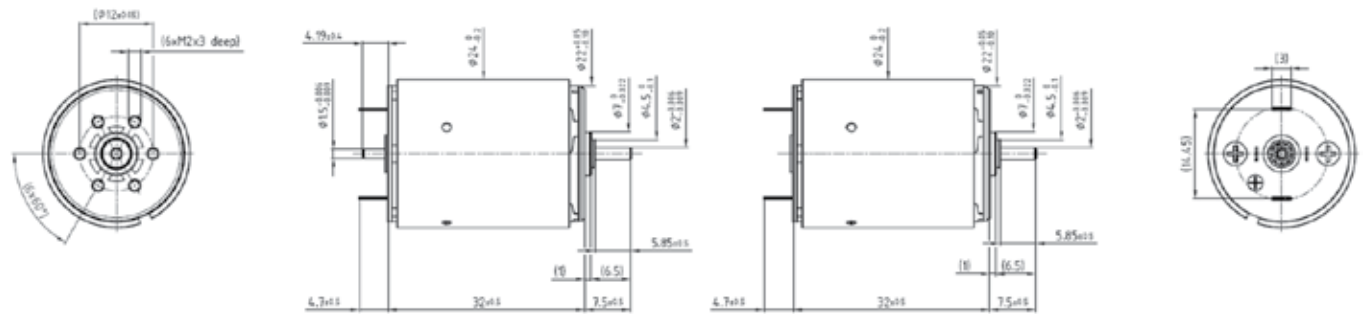

Dimensions in mm

### 24DCT 32P1/P2 **** .*

| Electrical Data | **** | 226P | 221P | 216P | 215P | 213P | 212P | |
|---|---|---|---|---|---|---|---|---|
| 1 Nominal Voltage | V | 3 | 6 | 9 | 12 | 15 | 18 | Volt |
| 2 No-Load Speed | $n_0$ | 5718 | 7365 | 6444 | 7641 | 7368 | 7370 | rpm |
| 3 No-Load Current | $I_0$ | 44.1 | 28.4 | 16.6 | 14.7 | 11.4 | 8.6 | mA |
| 4 Terminal Resistance | R | 0.4 | 0.7 | 2.0 | 2.5 | 4.1 | 5.9 | Ω |
| 5 Output Power | $P_{2max.}$ | 5.3 | 8.5 | 7.5 | 9.4 | 9.1 | 9.1 | W |
| 6 Stall Torque | mNm | 40.6 (5.75) | 63.07 (8.94) | 60.34 (8.55) | 71.54 (10.14) | 70.38 (9.97) | 70.35 (9.97) | mNm (oz-in) |
| 7 Efficiency | $\eta_{max.}$ | 86 | 89 | 88 | 89 | 89 | 90 | % |
| 8 Max Continuous Speed | $n_{e\ max.}$ | 10000 | 10000 | 10000 | 10000 | 10000 | 10000 | rpm |
| 9 Max Continuous Torque | $M_{e\ max.}$ | 12.86 (1.83) | 14.15 (2.01) | 14.81 (2.1) | 14.81 (2.1) | 14.96 (2.12) | 14.97 (2.13) | mNm (oz-in) |
| 10 Max Continuous Current | $I_{e\ max.}$ | 2.62 | 1.85 | 1.13 | 1.00 | 0.78 | 0.65 | A |
| 11 Back-EMF Constant | $k_E$ | 0.52 | 0.81 | 1.39 | 1.57 | 2.03 | 2.44 | mV/rpm |
| 12 Torque Constant | $k_M$ | 4.98 | 7.75 | 13.29 | 14.95 | 19.38 | 23.26 | mNm/A |
| 13 Motor Regulation | $R/k^2$ | 14.75 | 12.23 | 11.18 | 11.18 | 10.96 | 10.97 | $10^3$/Nms |
| 14 Friction Torque | $T_F$ | 0.22 (0.04) | 0.22 (0.04) | 0.22 (0.04) | 0.22 (0.04) | 0.22 (0.04) | 0.22 (0.04) | mNm (oz-in) |
| 15 Mechanical Time Constant | $\tau_m$ | 6.97 | 5.87 | 5.34 | 5.28 | 5.20 | 5.16 | ms |
| 16 Rotor Inertia | J | 4.73 | 4.80 | 4.78 | 4.72 | 4.74 | 4.70 | $g.cm^2$ |
| **General Data** | | | | | | | | |
| 17 Thermal Resistance (rotor/body) | $R_{th1}$ / $R_{th2}$ | 6/22 | | | | | | °C/W |
| 18 Thermal Time Constant (rotor/stator) | $t_{w1}/t_{w2}$ | 9/550 | | | | | | S |
| 19 Operating Temperature Range: | $t_{w1}/t_{w2}$ | -30°C to 85°C (-22°F to 185°F) | | | | | | °C (°F) |
| | rotor | 100°C (212°F) | | | | | | °C (°F) |
| 20 Shaft Load Max.: | | With sleeve bearings | | | | | | |
| (5mm from bearing) | -radial | 3 (10.79) | | | | | | N (oz) |
| | -axial | 100 (359.6) | | | | | | N (oz) |
| 21 Shaft Play: | -radial | 0.03 (0.0012) | | | | | | mm (inch) |
| | -axial | 0.15 (0.0059) | | | | | | mm (inch) |
| 22 Weight | g | 72 (2.54) | | | | | | g (oz) |

* Also available with ball bearing

| Execution | | | |
|---|---|---|---|
| Gearbox | Single Shaft | MR2 | E9 |
| R22 | 4 | 5 | 6 |
| M22 | 1 | 2 | 3 |
| K24 | 7 | 8 | 9 |
| K27 | 1 | 2 | 3 |

Note:
P1:standard commutation
P2:special commutation for double shaft version

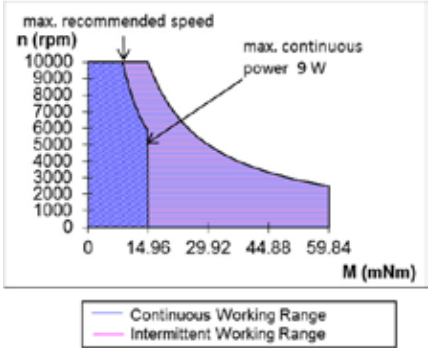


V121616

## 24DCT Athlonix™ Precious metal commutation Ø24mm 14.97 mNm

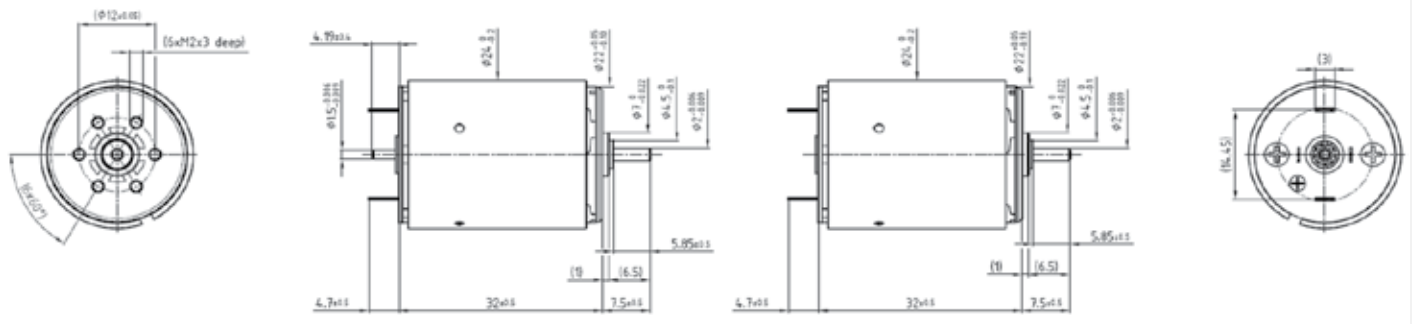

Dimensions in mm

### 24DCT 32P1/P2 **** .*

| Electrical Data | **** | 215E | 214E | 213E | 212E | 210E | |
|---|---|---|---|---|---|---|---|
| 1 Nominal Voltage | V | 21 | 24 | 30 | 36 | 48 | Volt |
| 2 No-Load Speed | $n_0$ | 6980 | 7076 | 7837 | 7837 | 7631 | rpm |
| 3 No-Load Current | $I_0$ | 7.7 | 6.8 | 6.0 | 5.0 | 3.7 | mA |
| 4 Terminal Resistance | R | 9.9 | 12.8 | 16.2 | 23.4 | 46.1 | Ω |
| 5 Output Power | $P_{2max.}$ | 8.0 | 8.0 | 9.2 | 9.2 | 8.6 | W |
| 6 Stall Torque | mNm | 60.64 (8.59) | 60.51 (8.57) | 67.38 (9.55) | 66.95 (9.49) | 62.1 (8.8) | mNm (oz-in) |
| 7 Efficiency | $\eta_{max.}$ | 88 | 88 | 89 | 89 | 88 | % |
| 8 Max Continuous Speed | $n_{e\ max.}$ | 10000 | 10000 | 10000 | 10000 | 10000 | rpm |
| 9 Max Continuous Torque | $M_{e\ max.}$ | 14.25 (2.02) | 14.14 (2.01) | 14.18 (2.01) | 14.13 (2.01) | 13.79 (1.96) | mNm (oz-in) |
| 10 Max Continuous Current | $I_{e\ max.}$ | 0.50 | 0.44 | 0.39 | 0.32 | 0.23 | A |
| 11 Back-EMF Constant | $k_E$ | 3.00 | 3.38 | 3.82 | 4.58 | 6.27 | mV/rpm |
| 12 Torque Constant | $k_M$ | 28.63 | 32.27 | 36.44 | 43.72 | 59.86 | mNm/A |
| 13 Motor Regulation | $R/k^2$ | 12.05 | 12.24 | 12.18 | 12.26 | 12.87 | $10^3$/Nms |
| 14 Friction Torque | $T_F$ | 0.22 (0.04) | 0.22 (0.04) | 0.22 (0.04) | 0.22 (0.04) | 0.22 (0.04) | mNm (oz-in) |
| 15 Mechanical Time Constant | $\tau_m$ | 5.80 | 5.78 | 5.77 | 5.76 | 5.75 | ms |
| 16 Rotor Inertia | J | 4.81 | 4.72 | 4.74 | 4.70 | 4.47 | $g.cm^2$ |
| **General Data** | | | | | | | |
| 17 Thermal Resistance (rotor/body) | $R_{th1}$ / $R_{th2}$ | 6/22 | | | | | °C/W |
| 18 Thermal Time Constant (rotor/stator) | $t_{w1}/t_{w2}$ | 9/550 | | | | | S |
| 19 Operating Temperature Range: | $t_{w1}/t_{w2}$ | -30°C to 85°C (-22°F to 185°F) | | | | | °C (°F) |
| | rotor | 100°C (212°F) | | | | | °C (°F) |
| 20 Shaft Load Max.: | | With sleeve bearings | | | | | |
| (5mm from bearing) | -radial | 3(10.79) | | | | | N (oz) |
| | -axial | 100 (359.6) | | | | | N (oz) |
| 21 Shaft Play: | -radial | 0.03 (0.0012) | | | | | mm (inch) |
| | -axial | 0.15 (0.0059) | | | | | mm (inch) |
| 22 Weight | g | 72 (2.54) | | | | | g (oz) |

* Also available with ball bearing

| Execution | | | |
|---|---|---|---|
| Gearbox | Single Shaft | MR2 | E9 |
| R22 | 4 | 5 | 6 |
| M22 | 1 | 2 | 3 |
| K24 | 7 | 8 | 9 |
| K27 | 1 | 2 | 3 |

Note:
P1:standard commutation
P2:special commutation for double shaft version

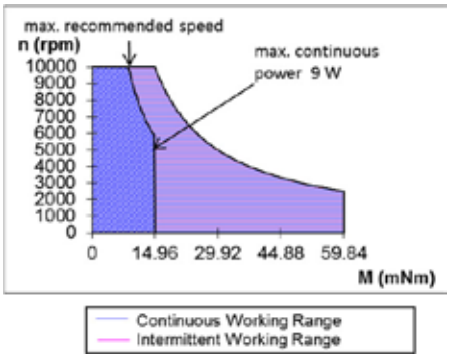


V121616

## 25GST2R82 Graphite-Copper commutation Ø25mm 33 mNm

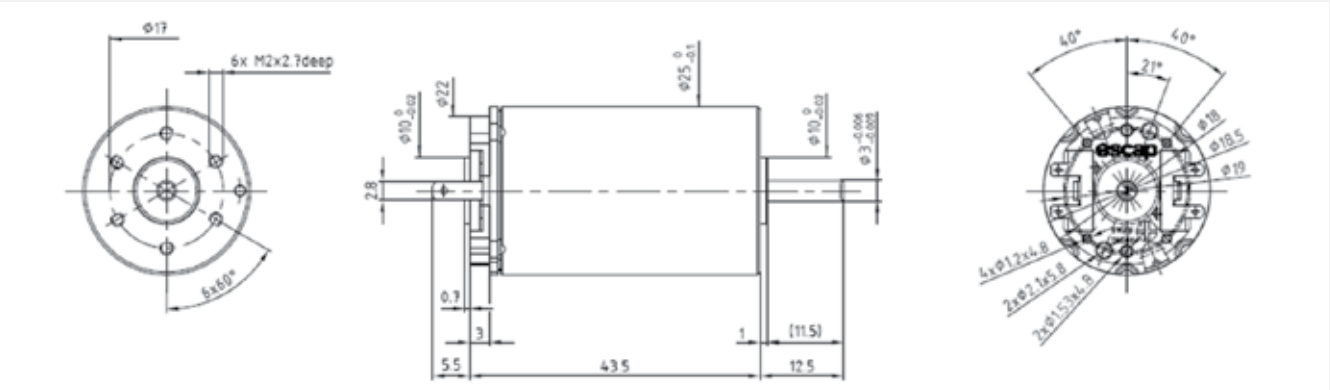


Dimensions in mm

### 25GST2R82 **** .1

| Electrical Data | **** | 228E | 230E | 216P | 216E | |
|---|---|---|---|---|---|---|
| 1 Nominal Voltage | V | 18 | 18 | 24 | 35 | Volt |
| 2 No-Load Speed | $n_0$ | 11,125 | 11,450 | 10,320 | 7,850 | rpm |
| 3 No-Load Current | $I_0$ | 110.0 | 110.0 | 70.0 | 40.0 | mA |
| 4 Terminal Resistance | R | 1.6 | 1.3 | 3.3 | 12.5 | Ω |
| 5 Output Power | $P_{2max.}$ | 23.8 | 26.0 | 24.0 | 23.3 | W |
| 6 Stall Torque | mNm | 172 (24.36) | 206 (29.18) | 160 (22.66) | 118 (16.72) | mNm (oz-in) |
| 7 Efficiency | $h_{max.}$ | 81 | 83 | 81 | 78 | % |
| 8 Max Continuous Speed | $n_{e\ max.}$ | 10,000 | 10,000 | 10,000 | 10,000 | rpm |
| 9 Max Continuous Torque | $M_{e\ max.}$ | 30 (4.68) | 33 (4.68) | 30 (4.25) | 30 (4.25) | mNm (oz-in) |
| 10 Max Continuous Current | $I_{e\ max.}$ | 2.10 | 2.30 | 1.45 | 0.75 | A |
| 11 Back-EMF Constant | $k_E$ | 1.60 | 1.56 | 2.30 | 4.40 | mV/rpm |
| 12 Torque Constant | $k_M$ | 15.30 | 14.90 | 22.00 | 42.00 | mNm/A |
| 13 Motor Regulation | $R/k^2$ | 6.9 | 5.9 | 6.8 | 7.10 | $10^3$/Nms |
| 14 Friction Torque | $T_F$ | 1.68 (0.24) | 1.64 (0.24) | 1.54 (0.22) | 1.68 (0.24) | mNm (oz-in) |
| 15 Rotor Inductance | L | 0.10 | 0.10 | 0.10 | 0.80 | mH |
| 16 Mechanical Time Constant | $t_m$ | 6.9 | 5.9 | 6.8 | 7.1 | ms |
| 17 Rotor Inertia | J | 10.00 | 10.00 | 10.00 | 10.00 | $g.cm^2$ |
| **General Data** | | | | | | |
| 18 Thermal Resistance (rotor/body) | $R_{th1}$ / $R_{th2}$ | | 6/13 | | | °C/W |
| 19 Thermal Time Constant (rotor/stator) | $t_{w1}/t_{w2}$ | | 10/450 | | | S |
| 20 Operating Temperature Range: | motor | | -30°C to 85°C (-22°F to 185°F) | | | °C (°F) |
| | rotor | | 100°C (212°F) | | | °C (°F) |
| 21 Shaft Load Max.: | | | With ball bearings | | | |
| (5mm from bearing) | -radial | | 12.0 (43.2) | | | N (oz) |
| | -axial | | 680 (2,445.9) | | | N (oz) |
| 22 Shaft Play: | -radial | | <0.03 (0.0012) | | | mm (inch) |
| | -axial | | 0.15 (0.0059) | | | mm (inch) |
| 23 Weight | g | | 111 (3.92) | | | g (oz) |

**Execution Table**

| Gearbox | Single Shaft | E9 | HEDS | MR2 |
|---|---|---|---|---|
| R32 | 1 | 2 | 4 | Upon Request |
| M22 | 5 | 11 | Upon Request | Upon Request |

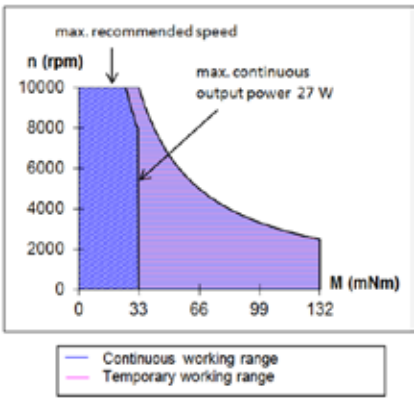


V121616

## 25GT2R82 Graphite-Copper commutation Ø25mm 47 mNm

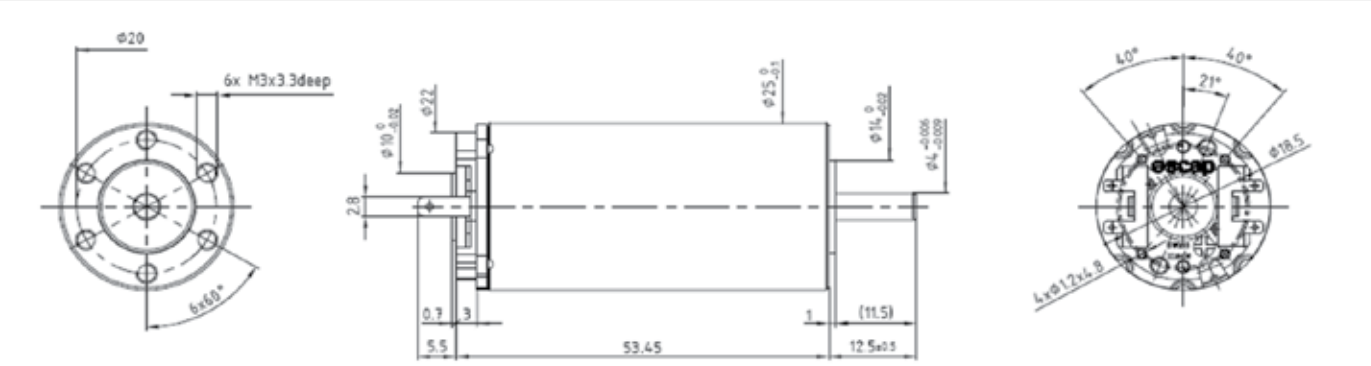


Dimensions in mm

### 25GT2R82 **** .1

| Electrical Data | **** | 222E | 222P | 230E | 219E | |
|---|---|---|---|---|---|---|
| 1 Nominal Voltage | V | 15 | 18 | 24 | 36 | Volt |
| 2 No-Load Speed | $n_0$ | 4,075 | 9,460 | 10,000 | 8,260 | rpm |
| 3 No-Load Current | $I_0$ | 80.0 | 140.0 | 120.0 | 65.0 | mA |
| 4 Terminal Resistance | R | 4.0 | 1.3 | 1.8 | 7.4 | Ω |
| 5 Output Power | $P_{2max.}$ | 36.8 | 33.0 | 37.0 | 33.0 | W |
| 6 Stall Torque | mNm | 129 (18.27) | 249 (35.27) | 315 (44.61) | 194 (27.48) | mNm (oz-in) |
| 7 Efficiency | $h_{max.}$ | 73 | 81 | 82 | 78 | % |
| 8 Max Continuous Speed | $n_{e\ max.}$ | 10,000 | 10,000 | 10,000 | 10,000 | rpm |
| 9 Max Continuous Torque | $M_{e\ max.}$ | 47 (5.95) | 42 (5.95) | 47 (6.67) | 41 (5.81) | mNm (oz-in) |
| 10 Max Continuous Current | $I_{e\ max.}$ | 1.44 | 2.50 | 2.20 | 1.06 | A |
| 11 Back-EMF Constant | $k_E$ | 3.60 | 1.88 | 2.40 | 4.30 | mV/rpm |
| 12 Torque Constant | $k_M$ | 34.40 | 18.00 | 23.00 | 41.10 | mNm/A |
| 13 Motor Regulation | $R/k^2$ | 3.4 | 4.0 | 4.2 | 4.40 | $10^3$/Nms |
| 14 Friction Torque | $T_F$ | 2.75 (0.39) | 2.5 (0.36) | 2.76 (0.4) | 2.65 (0.38) | mNm (oz-in) |
| 15 Rotor Inductance | L | 0.30 | 0.08 | 0.14 | 0.50 | mH |
| 16 Mechanical Time Constant | $t_m$ | 4.4 | 5.2 | 5.5 | 5.7 | ms |
| 17 Rotor Inertia | J | 13.00 | 13.00 | 12.50 | 13.00 | $g.cm^2$ |
| **General Data** | | | | | | |
| 18 Thermal Resistance (rotor/body) | $R_{th1}$ / $R_{th2}$ | | 5 /11 | | | °C/W |
| 19 Thermal Time Constant (rotor/stator) | $t_{w1}/t_{w2}$ | | 10/450 | | | S |
| 20 Operating Temperature Range: | motor | | -30°C to 85°C (-22°F to 185°F) | | | °C (°F) |
| | rotor | | 100°C (212°F) | | | °C (°F) |
| 21 Shaft Load Max.: | | | With ball bearings | | | |
| (5mm from bearing) | -radial | | 25.0 (89.9) | | | N (oz) |
| | -axial | | 1,000 (3,596.9) | | | N (oz) |
| 22 Shaft Play: | -radial | | <0.03 (0.0012) | | | mm (inch) |
| | -axial | | 0.15 (0.0059) | | | mm (inch) |
| 23 Weight | g | | 145 (5.12) | | | g (oz) |

**Execution Table**

| Gearbox | Single Shaft | E9 | HEDS | MR2 |
|---|---|---|---|---|
| R32 | 6 | 8 | - | Upon Request |
| R40 | 1 | 2 | 4 | Upon Request |
| M22 | 9 | Upon Request | Upon Request | Upon Request |

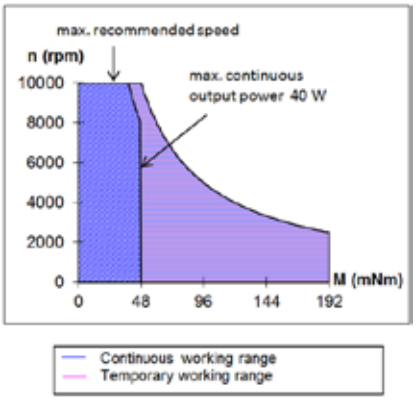


V121616

## 26N58 Precious metal commutation Ø26mm 17.9 mNm

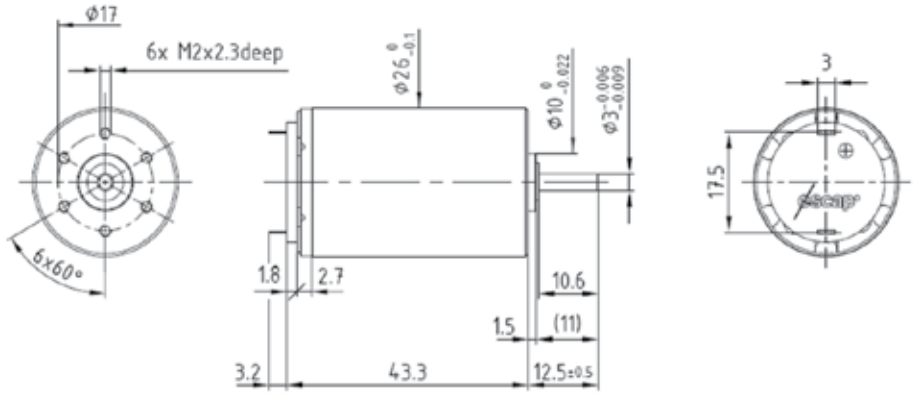


Dimensions in mm

### 26N58 **** .1

| Electrical Data | **** | 216P | 216E | 113 | 110 | |
|---|---|---|---|---|---|---|
| 1 Nominal Voltage | V | 6 | 12 | 15 | 24 | Volt |
| 2 No-Load Speed | $n_0$ | 4,600 | 4,735 | 5,470 | 6,660 | rpm |
| 3 No-Load Current | $I_0$ | 31.0 | 16.0 | 15.0 | 20.0 | mA |
| 4 Terminal Resistance | R | 2.5 | 10.0 | 15.2 | 32.0 | Ω |
| 5 Output Power | $P_{2max.}$ | 6.2 | 6.0 | 5.2 | 4.6 | W |
| 6 Stall Torque | mNm | 29.6 (4.2) | 28.6 (4.06) | 25 (3.55) | 25 (3.55) | mNm (oz-in) |
| 7 Efficiency | $h_{max.}$ | 79 | 78 | 77 | 70 | % |
| 8 Max Continuous Speed | $n_{e\ max.}$ | 8,000 | 8,000 | 8,000 | 8,000 | rpm |
| 9 Max Continuous Torque | $M_{e\ max.}$ | 17.9 (2.45) | 17.3 (2.45) | 15.1 (2.14) | 13.3 (1.89) | mNm (oz-in) |
| 10 Max Continuous Current | $I_{e\ max.}$ | 1.47 | 0.74 | 0.60 | 0.41 | A |
| 11 Back-EMF Constant | $k_E$ | 1.29 | 2.50 | 2.70 | 3.51 | mV/rpm |
| 12 Torque Constant | $k_M$ | 12.30 | 23.90 | 25.80 | 33.50 | mNm/A |
| 13 Motor Regulation | $R/k^2$ | 16.5 | 17.5 | 22.8 | 28.51 | $10^3$/Nms |
| 14 Friction Torque | $T_F$ | 0.38 (0.06) | 0.38 (0.06) | 0.38 (0.06) | 0.38 (0.06) | mNm (oz-in) |
| 15 Rotor Inductance | L | 0.22 | 0.80 | 1.00 | 1.50 | mH |
| 16 Mechanical Time Constant | $t_m$ | 9.9 | 10.5 | 13.7 | 17.1 | ms |
| 17 Rotor Inertia | J | 6.00 | 6.00 | 6.00 | 6.00 | $g.cm^2$ |
| **General Data** | | | | | | |
| 18 Thermal Resistance (rotor/body) | $R_{th1}$ / $R_{th2}$ | | 5 /12 | | | °C/W |
| 19 Thermal Time Constant (rotor/stator) | $t_{w1}/t_{w2}$ | | 10/640 | | | S |
| 20 Operating Temperature Range: | motor | | -30°C to 85°C (-22°F to 185°F) | | | °C (°F) |
| | rotor | | 100°C (212°F) | | | °C (°F) |
| 21 Shaft Load Max.: | | | With sleeve bearings | | | |
| (5mm from bearing) | -radial | | 6.0 (21.6) | | | N (oz) |
| | -axial | | 250 (899.2) | | | N (oz) |
| 22 Shaft Play: | -radial | | <0.03 (0.0012) | | | mm (inch) |
| | -axial | | 0.15 (0.0059) | | | mm (inch) |
| 23 Weight | g | | 114 (4.03) | | | g (oz) |

| Execution Table | | |
|---|---|---|
| Gearbox | Single Shaft | Double Shaft for E9 |
| R22 | 5 | 9 |
| M22 | 5 | 9 |
| K24 | 5 | 9 |
| K27 | 5 | 9 |

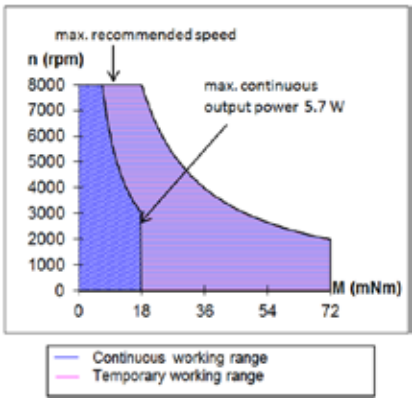


V121616

## 28L28 Precious metal commutation Ø28mm 21 mNm

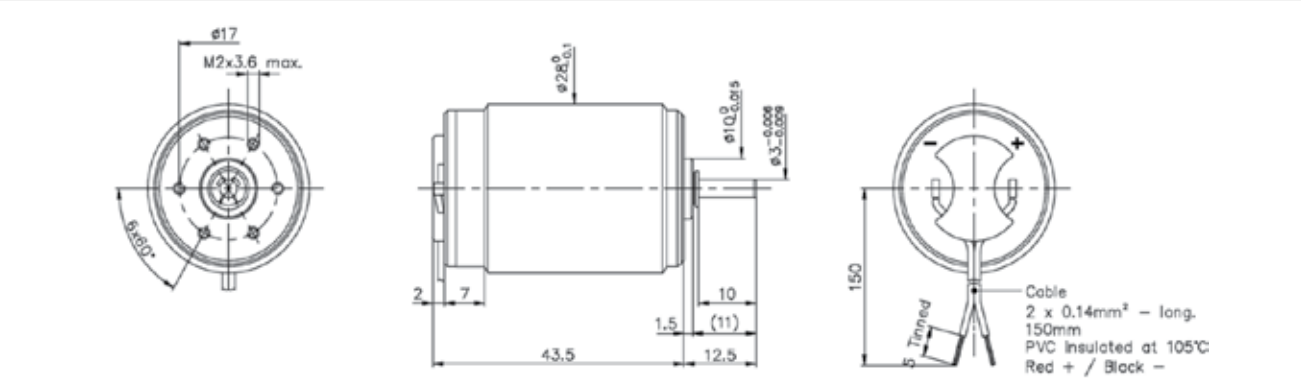


Dimensions in mm

### 28L28 **** .49

| Electrical Data | **** | 219 | 416E | 413E | 410E | |
|---|---|---|---|---|---|---|
| 1 Nominal Voltage | V | 12 | 24 | 28 | 36 | Volt |
| 2 No-Load Speed | $n_0$ | 5,300 | 5,590 | 5,325 | 5,000 | rpm |
| 3 No-Load Current | $I_0$ | 22.0 | 11.0 | 9.0 | 6.6 | mA |
| 4 Terminal Resistance | R | 6.0 | 19.5 | 33.0 | 71.0 | Ω |
| 5 Output Power | $P_{2max.}$ | 9.6 | 10.0 | 9.3 | 9.0 | W |
| 6 Stall Torque | mNm | 43 (6.09) | 50 (7.09) | 32 (4.54) | 34 (4.82) | mNm (oz-in) |
| 7 Efficiency | $h_{max.}$ | 80 | 82 | 80 | 78 | % |
| 8 Max Continuous Speed | $n_{e\ max.}$ | 8,000 | 8,000 | 8,000 | 8,000 | rpm |
| 9 Max Continuous Torque | $M_{e\ max.}$ | 19.9 (2.98) | 21 (2.98) | 19.4 (2.75) | 18.5 (2.62) | mNm (oz-in) |
| 10 Max Continuous Current | $I_{e\ max.}$ | 0.95 | 0.53 | 0.40 | 0.28 | A |
| 11 Back-EMF Constant | $k_E$ | 2.24 | 4.26 | 5.20 | 7.10 | mV/rpm |
| 12 Torque Constant | $k_M$ | 21.40 | 40.70 | 49.70 | 67.80 | mNm/A |
| 13 Motor Regulation | $R/k^2$ | 13.0 | 12.0 | 13.2 | 15.20 | $10^3$/Nms |
| 14 Friction Torque | $T_F$ | 0.47 (0.07) | 0.45 (0.07) | 0.45 (0.07) | 0.45 (0.07) | mNm (oz-in) |
| 15 Rotor Inductance | L | 0.50 | 2.40 | 3.20 | 5.20 | mH |
| 16 Mechanical Time Constant | $t_m$ | 13.5 | 21.0 | 17.8 | 16.7 | ms |
| 17 Rotor Inertia | J | 10.40 | 17.50 | 13.50 | 11.00 | $g.cm^2$ |
| **General Data** | | | | | | |
| 18 Thermal Resistance (rotor/body) | $R_{th1}$ / $R_{th2}$ | | 5 /12 | | | °C/W |
| 19 Thermal Time Constant (rotor/stator) | $t_{w1}/t_{w2}$ | | 13/760 | | | S |
| 20 Operating Temperature Range: | motor | | -30°C to 85°C (-22°F to 185°F) | | | °C (°F) |
| | rotor | | 100°C (212°F) | | | °C (°F) |
| 21 Shaft Load Max.: | | | With sleeve bearings | | | |
| (5mm from bearing) | -radial | | 6.0 (21.6) | | | N (oz) |
| | -axial | | 250 (899.2) | | | N (oz) |
| 22 Shaft Play: | -radial | | <0.018 (0.0007) | | | mm (inch) |
| | -axial | | 0.15 (0.0059) | | | mm (inch) |
| 23 Weight | g | | 125 (4.41) | | | g (oz) |

| Execution Table | | |
|---|---|---|
| Gearbox | Single Shaft | Double Shaft for E9 |
| R22 | 164 | 317 |
| M22 | 164 | 317 |
| R32 | 49 | 315 |

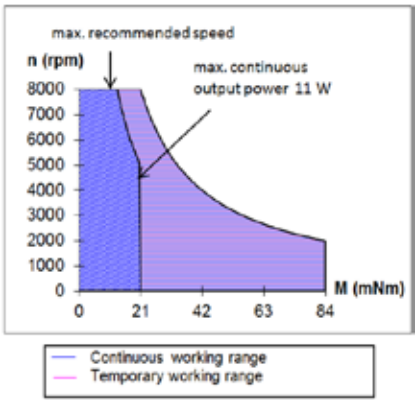


V121616

## 28LT12 Graphite-Copper commutation Ø28mm 24 mNm

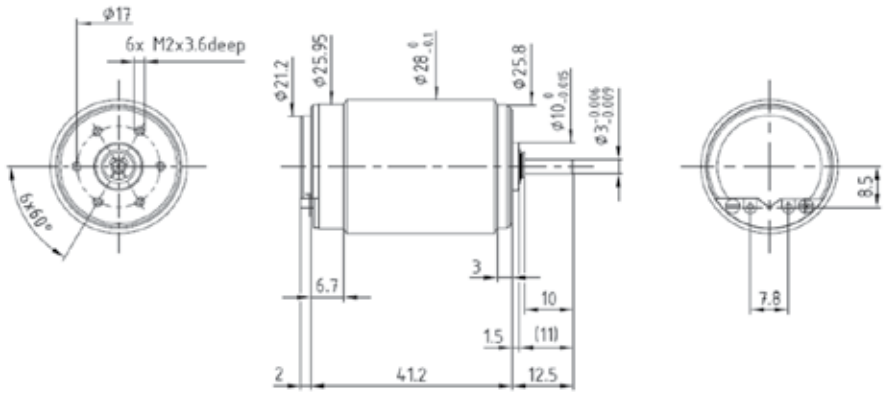


Dimensions in mm

### 28LT12 **** .49

| Electrical Data | **** | 219 | 416E | |
|---|---|---|---|---|
| 1 Nominal Voltage | V | 18 | 32 | Volt |
| 2 No-Load Speed | $n_0$ | 7,860 | 7,345 | rpm |
| 3 No-Load Current | $I_0$ | 65.0 | 35.0 | mA |
| 4 Terminal Resistance | R | 6.2 | 19.9 | Ω |
| 5 Output Power | $P_{2max.}$ | 19.0 | 20.0 | W |
| 6 Stall Torque | mNm | 63 (8.93) | 65 (9.21) | mNm (oz-in) |
| 7 Efficiency | $h_{max.}$ | 72 | 73 | % |
| 8 Max Continuous Speed | $n_{e\ max.}$ | 10,000 | 10,000 | rpm |
| 9 Max Continuous Torque | $M_{e\ max.}$ | 23 (3.4) | 24 (3.4) | mNm (oz-in) |
| 10 Max Continuous Current | $I_{e\ max.}$ | 1.13 | 0.63 | A |
| 11 Back-EMF Constant | $k_E$ | 2.24 | 4.26 | mV/rpm |
| 12 Torque Constant | $k_M$ | 21.40 | 40.70 | mNm/A |
| 13 Motor Regulation | $R/k^2$ | 13.0 | 12.0 | $10^3$/Nms |
| 14 Friction Torque | $T_F$ | 1.39 (0.2) | 1.42 (0.21) | mNm (oz-in) |
| 15 Rotor Inductance | L | 0.50 | 2.40 | mH |
| 16 Mechanical Time Constant | $t_m$ | 13.9 | 21.4 | ms |
| 17 Rotor Inertia | J | 10.70 | 17.80 | $g.cm^2$ |
| **General Data** | | | | |
| 18 Thermal Resistance (rotor/body) | $R_{th1}$ / $R_{th2}$ | 5 /12 | | °C/W |
| 19 Thermal Time Constant (rotor/stator) | $t_{w1}/t_{w2}$ | 27/760 | | S |
| 20 Operating Temperature Range: | motor | -30°C to 85°C (-22°F to 185°F) | | °C (°F) |
| | rotor | 100°C (212°F) | | °C (°F) |
| 21 Shaft Load Max.: | | With sleeve bearings | | |
| (5mm from bearing) | -radial | 6.0 (21.6) | | N (oz) |
| | -axial | 250 (899.2) | | N (oz) |
| 22 Shaft Play: | -radial | <0.018 (0.0007) | | mm (inch) |
| | -axial | 0.15 (0.0059) | | mm (inch) |
| 23 Weight | g | 135 (4.77) | | g (oz) |

**Execution Table**

| Gearbox | Single Shaft | Double Shaft for E9 |
|---|---|---|
| R22 | 164 | 319 |
| M22 | 164 | - |
| R32 | 49 | 316 |

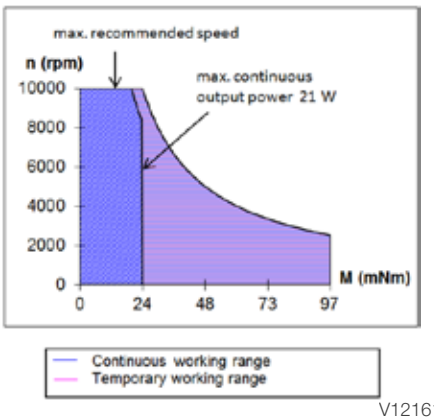


V121616

## 28DT12 Graphite-Copper commutation Ø28mm 41 mNm

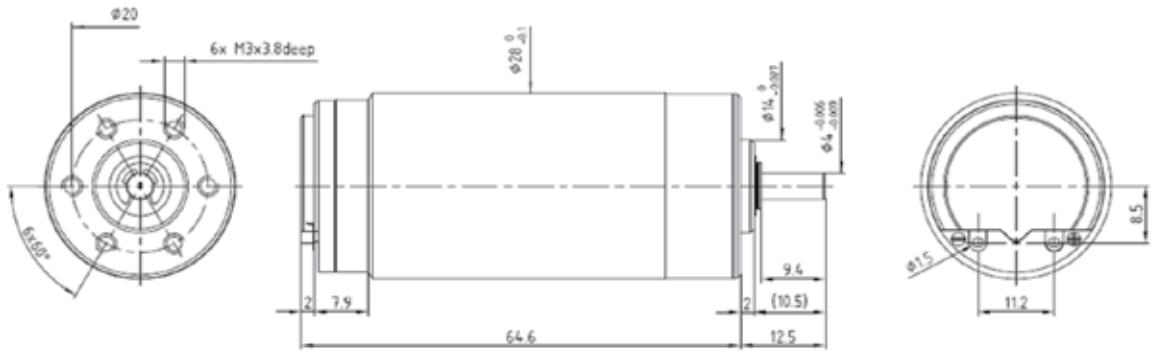


Dimensions in mm

### 28DT12 **** .1

| Electrical Data | **** | 222P | 219P | 222E | 219E | |
|---|---|---|---|---|---|---|
| 1 Nominal Voltage | V | 12 | 15 | 24 | 28 | Volt |
| 2 No-Load Speed | $n_0$ | 6,840 | 7,100 | 6,851 | 6,870 | rpm |
| 3 No-Load Current | $I_0$ | 210.0 | 180.0 | 110.0 | 90.0 | mA |
| 4 Terminal Resistance | R | 1.9 | 2.9 | 6.2 | 9.9 | Ω |
| 5 Output Power | $P_{2max.}$ | 24.0 | 24.0 | 27.0 | 24.0 | W |
| 6 Stall Torque | mNm | 102 (14.45) | 101 (14.31) | 126 (17.85) | 107 (15.16) | mNm (oz-in) |
| 7 Efficiency | $h_{max.}$ | 67 | 66 | 69 | 68 | % |
| 8 Max Continuous Speed | $n_{e\ max.}$ | 9,000 | 9,000 | 9,000 | 9,000 | rpm |
| 9 Max Continuous Torque | $M_{e\ max.}$ | 37 (5.1) | 36 (5.1) | 41 (5.81) | 37 (5.24) | mNm (oz-in) |
| 10 Max Continuous Current | $I_{e\ max.}$ | 2.50 | 2.00 | 1.40 | 1.10 | A |
| 11 Back-EMF Constant | $k_E$ | 1.70 | 2.04 | 3.40 | 3.95 | mV/rpm |
| 12 Torque Constant | $k_M$ | 16.20 | 19.50 | 32.50 | 37.70 | mNm/A |
| 13 Motor Regulation | $R/k^2$ | 7.0 | 8.0 | 6.0 | 7.00 | $10^3$/Nms |
| 14 Friction Torque | $T_F$ | 3.4 (0.49) | 3.4 (0.49) | 3.4 (0.49) | 3.4 (0.49) | mNm (oz-in) |
| 15 Rotor Inductance | L | 0.20 | 0.30 | 0.75 | 1.10 | mH |
| 16 Mechanical Time Constant | $t_m$ | 14.0 | 14.4 | 12.0 | 12.6 | ms |
| 17 Rotor Inertia | J | 20.00 | 18.00 | 20.00 | 18.00 | $g.cm^2$ |
| **General Data** | | | | | | |
| 18 Thermal Resistance (rotor/body) | $R_{th1}$ / $R_{th2}$ | | 3.5/8 | | | °C/W |
| 19 Thermal Time Constant (rotor/stator) | $t_{w1}/t_{w2}$ | | 18/630 | | | S |
| 20 Operating Temperature Range: | motor | | -30°C to 85°C (-22°F to 185°F) | | | °C (°F) |
| | rotor | | 100°C (212°F) | | | °C (°F) |
| 21 Shaft Load Max.: | | | With sleeve bearings | | | |
| (5mm from bearing) | -radial | | 8.0 (28.8) | | | N (oz) |
| | -axial | | 500 (1,798.5) | | | N (oz) |
| 22 Shaft Play: | -radial | | <0.025 (0.001) | | | mm (inch) |
| | -axial | | 0.15 (0.0059) | | | mm (inch) |
| 23 Weight | g | | 200 (7.06) | | | g (oz) |

| Execution Table | | | |
|---|---|---|---|
| Gearbox | Single Shaft | Double Shaft for E9 | HEDS |
| R32 | 4 | 106 | 103 |
| R40 | 1 | 98 | Upon Request |

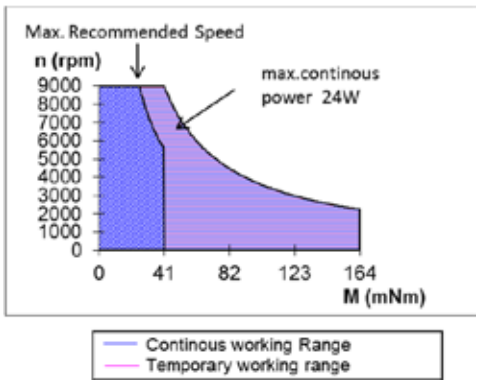


V121616

## 30GT2R82 Graphite-Copper commutation Ø30mm 92 mNm

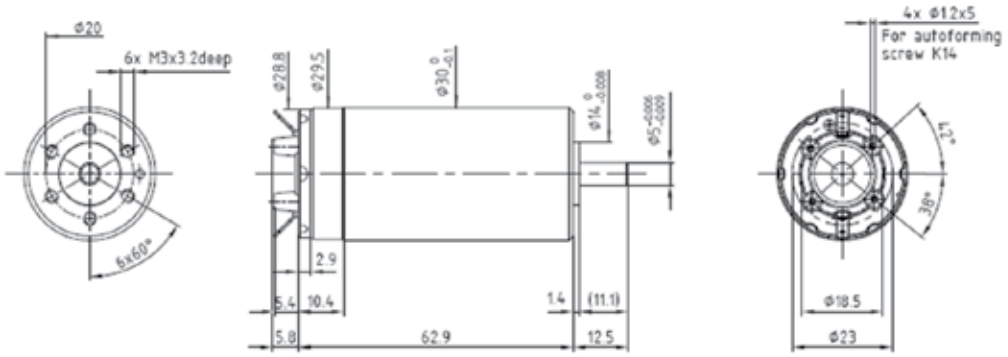


Dimensions in mm

### 30GT2R82 **** .4

| Electrical Data | **** | 234P | 234E | |
|---|---|---|---|---|
| 1 Nominal Voltage | V | 15 | 35 | Volt |
| 2 No-Load Speed | $n_0$ | 7,090 | 8,600 | rpm |
| 3 No-Load Current | $I_0$ | 180.0 | 90.0 | mA |
| 4 Terminal Resistance | R | 0.5 | 1.6 | Ω |
| 5 Output Power | $P_{2max.}$ | 77.0 | 82.0 | W |
| 6 Stall Torque | mNm | 628 (88.94) | 847 (119.95) | mNm (oz-in) |
| 7 Efficiency | $h_{max.}$ | 85 | 88 | % |
| 8 Max Continuous Speed | $n_{e\ max.}$ | 10,000 | 10,000 | rpm |
| 9 Max Continuous Torque | $M_{e\ max.}$ | 87 (13.03) | 92 (13.03) | mNm (oz-in) |
| 10 Max Continuous Current | $I_{e\ max.}$ | 4.50 | 2.50 | A |
| 11 Back-EMF Constant | $k_E$ | 2.10 | 4.05 | mV/rpm |
| 12 Torque Constant | $k_M$ | 20.10 | 38.70 | mNm/A |
| 13 Motor Regulation | $R/k^2$ | 1.2 | 1.1 | $10^3$/Nms |
| 14 Friction Torque | $T_F$ | 3.62 (0.52) | 3.48 (0.5) | mNm (oz-in) |
| 15 Rotor Inductance | L | 0.06 | 0.24 | mH |
| 16 Mechanical Time Constant | $t_m$ | 4.0 | 3.6 | ms |
| 17 Rotor Inertia | J | 33.00 | 33.00 | $g.cm^2$ |
| **General Data** | | | | |
| 18 Thermal Resistance (rotor/body) | $R_{th1}$ / $R_{th2}$ | 4.5/9 | | °C/W |
| 19 Thermal Time Constant (rotor/stator) | $t_{w1}/t_{w2}$ | 18/630 | | S |
| 20 Operating Temperature Range: | motor | -30°C to 85°C (-22°F to 185°F) | | °C (°F) |
| | rotor | 100°C (212°F) | | °C (°F) |
| 21 Shaft Load Max.: | | With ball bearings | | |
| (5mm from bearing) | -radial | 35.0 (125.9) | | N (oz) |
| | -axial | 100 (359.6) | | N (oz) |
| 22 Shaft Play: | -radial | negligible | | mm (inch) |
| | -axial | negligible | | mm (inch) |
| 23 Weight | g | 310 (10.94) | | g (oz) |

| Execution Table | | | |
|---|---|---|---|
| Gearbox | Single Shaft | E9 | HEDS |
| R32 | 4 | 5 | 20 |
| R40 | 4 | 5 | Upon Request |

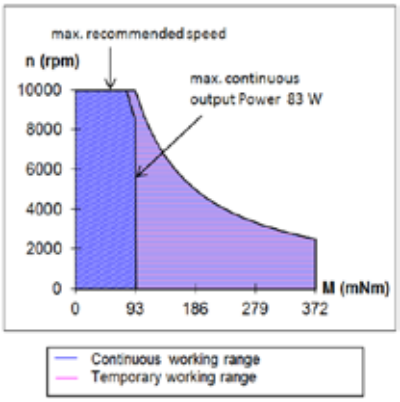


V121616

## 35NT2R32 Graphite-Copper commutation Ø35mm 56 mNm

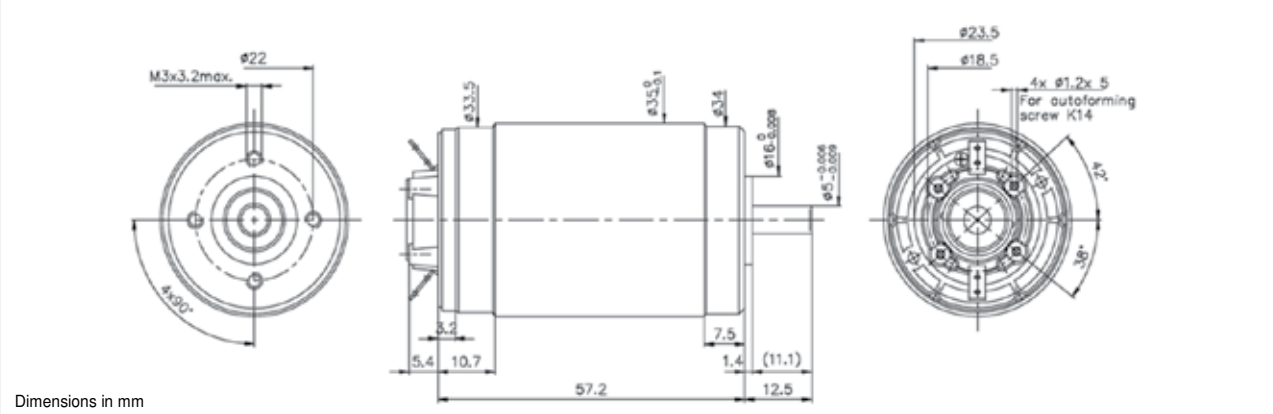


Dimensions in mm

### 35NT2R32 **** .1

| Electrical Data | **** | 228P | 228E | 416SP | |
|---|---|---|---|---|---|
| 1 Nominal Voltage | V | 9 | 15 | 24 | Volt |
| 2 No-Load Speed | $n_0$ | 5,020 | 4,315 | 4,365 | rpm |
| 3 No-Load Current | $I_0$ | 180.0 | 90.0 | 50.0 | mA |
| 4 Terminal Resistance | R | 1.0 | 3.6 | 8.3 | Ω |
| 5 Output Power | $P_{2max.}$ | 33.0 | 33.0 | 35.0 | W |
| 6 Stall Torque | mNm | 151 (21.39) | 137 (19.41) | 150 (21.25) | mNm (oz-in) |
| 7 Efficiency | $h_{max.}$ | 74 | 73 | 75 | % |
| 8 Max Continuous Speed | $n_{e\ max.}$ | 9,000 | 9,000 | 9,000 | rpm |
| 9 Max Continuous Torque | $M_{e\ max.}$ | 52 (7.65) | 54 (7.65) | 56 (7.94) | mNm (oz-in) |
| 10 Max Continuous Current | $I_{e\ max.}$ | 3.30 | 1.75 | 1.18 | A |
| 11 Back-EMF Constant | $k_E$ | 1.76 | 3.40 | 5.40 | mV/rpm |
| 12 Torque Constant | $k_M$ | 16.80 | 32.50 | 51.60 | mNm/A |
| 13 Motor Regulation | $R/k^2$ | 3.5 | 3.4 | 3.1 | $10^3$/Nms |
| 14 Friction Torque | $T_F$ | 3 (0.43) | 2.93 (0.42) | 2.6 (0.37) | mNm (oz-in) |
| 15 Rotor Inductance | L | 0.13 | 0.52 | 1.30 | mH |
| 16 Mechanical Time Constant | $t_m$ | 16.8 | 16.3 | 16.2 | ms |
| 17 Rotor Inertia | J | 48.00 | 48.00 | 52.00 | $g.cm^2$ |
| **General Data** | | | | | |
| 18 Thermal Resistance (rotor/body) | $R_{th1}$ / $R_{th2}$ | | 4/8 | | °C/W |
| 19 Thermal Time Constant (rotor/stator) | $t_{w1}/t_{w2}$ | | 40/920 | | S |
| 20 Operating Temperature Range: | motor | | -30°C to 85°C (-22°F to 185°F) | | °C (°F) |
| | rotor | | 100°C (212°F) | | °C (°F) |
| 21 Shaft Load Max.: | | | With ball bearings | | |
| (5mm from bearing) | -radial | | 35.0 (125.9) | | N (oz) |
| | -axial | | 100 (359.6) | | N (oz) |
| 22 Shaft Play: | -radial | | negligible | | mm (inch) |
| | -axial | | negligible | | mm (inch) |
| 23 Weight | g | | 310 (10.94) | | g (oz) |

| Execution Table | | | |
|---|---|---|---|
| Gearbox | Single Shaft | E9 | HEDS |
| R32 | 54 | 66 | Upon Request |
| R40 | 1 | 96 | Upon Request |

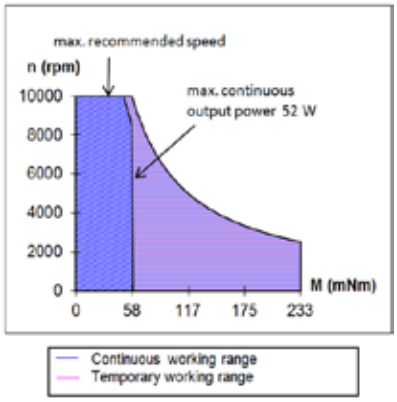


V121616

## 35NT2R82 Graphite-Copper commutation Ø35mm 114 mNm

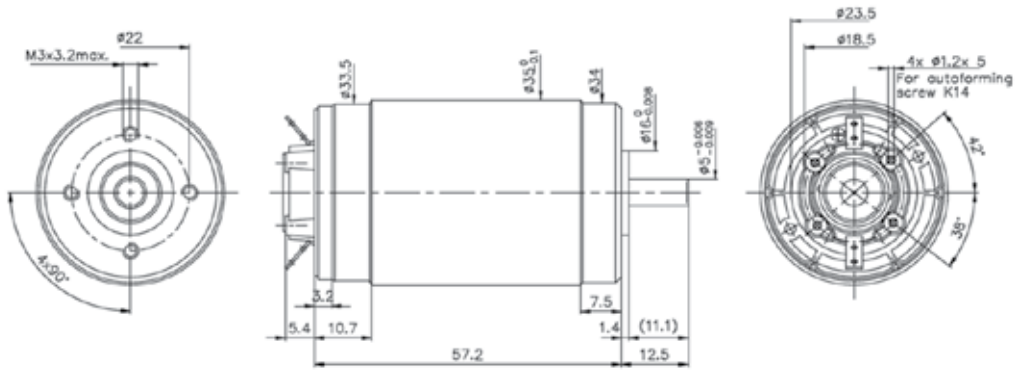


Dimensions in mm

### 35NT2R82 **** .1

| Electrical Data | **** | 426P | 226E | 426SP | 426E | |
|---|---|---|---|---|---|---|
| 1 Nominal Voltage | V | 18 | 28 | 32 | 60 | Volt |
| 2 No-Load Speed | $n_0$ | 6,765 | 6,935 | 5,850 | 5,760 | rpm |
| 3 No-Load Current | $I_0$ | 141.0 | 80.0 | 80.0 | 40.0 | mA |
| 4 Terminal Resistance | R | 0.6 | 1.6 | 2.2 | 7.7 | Ω |
| 5 Output Power | $P_{2max.}$ | 102.0 | 91.0 | 103.0 | 107.0 | W |
| 6 Stall Torque | mNm | 828 (117.26) | 676 (95.73) | 756 (107.06) | 782 (110.75) | mNm (oz-in) |
| 7 Efficiency | $h_{max.}$ | 87 | 87 | 86 | 86 | % |
| 8 Max Continuous Speed | $n_{e\ max.}$ | 9,000 | 9,000 | 9,000 | 9,000 | rpm |
| 9 Max Continuous Torque | $M_{e\ max.}$ | 108 (13.74) | 97 (13.74) | 109 (15.44) | 114 (16.15) | mNm (oz-in) |
| 10 Max Continuous Current | $I_{e\ max.}$ | 4.40 | 2.60 | 2.20 | 1.19 | A |
| 11 Back-EMF Constant | $k_E$ | 2.65 | 4.02 | 5.45 | 10.37 | mV/rpm |
| 12 Torque Constant | $k_M$ | 25.30 | 38.40 | 52.00 | 99.00 | mNm/A |
| 13 Motor Regulation | $R/k^2$ | 0.9 | 1.1 | 0.8 | 0.77 | $10^3$/Nms |
| 14 Friction Torque | $T_F$ | 3.57 (0.51) | 3.07 (0.44) | 4.16 (0.59) | 3.96 (0.57) | mNm (oz-in) |
| 15 Rotor Inductance | L | 0.10 | 0.22 | 0.40 | 1.70 | mH |
| 16 Mechanical Time Constant | $t_m$ | 6.1 | 5.9 | 5.9 | 5.5 | ms |
| 17 Rotor Inertia | J | 71.40 | 54.00 | 71.40 | 71.40 | $g.cm^2$ |
| **General Data** | | | | | | |
| 18 Thermal Resistance (rotor/body) | $R_{th1}$ / $R_{th2}$ | | 4/8 | | | °C/W |
| 19 Thermal Time Constant (rotor/stator) | $t_{w1}/t_{w2}$ | | 40/920 | | | S |
| 20 Operating Temperature Range: | motor | | -30°C to 85°C (-22°F to 185°F) | | | °C (°F) |
| | rotor | | 100°C (212°F) | | | °C (°F) |
| 21 Shaft Load Max.: | | | With ball bearings | | | |
| (5mm from bearing) | -radial | | 35.0 (125.9) | | | N (oz) |
| | -axial | | 100 (359.6) | | | N (oz) |
| 22 Shaft Play: | -radial | | negligible | | | mm (inch) |
| | -axial | | negligible | | | mm (inch) |
| 23 Weight | g | | 310 (10.94) | | | g (oz) |

**Execution Table**

| Gearbox | Single Shaft | E9 | HEDS |
|---|---|---|---|
| R32 | 54 | 66 | Upon Request |
| R40 | 1 | 96 | Upon Request |

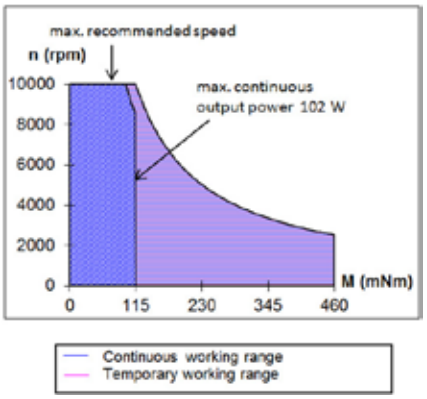


V121616

## 35GLT2R82 Graphite-Copper commutation Ø35mm 160 mNm

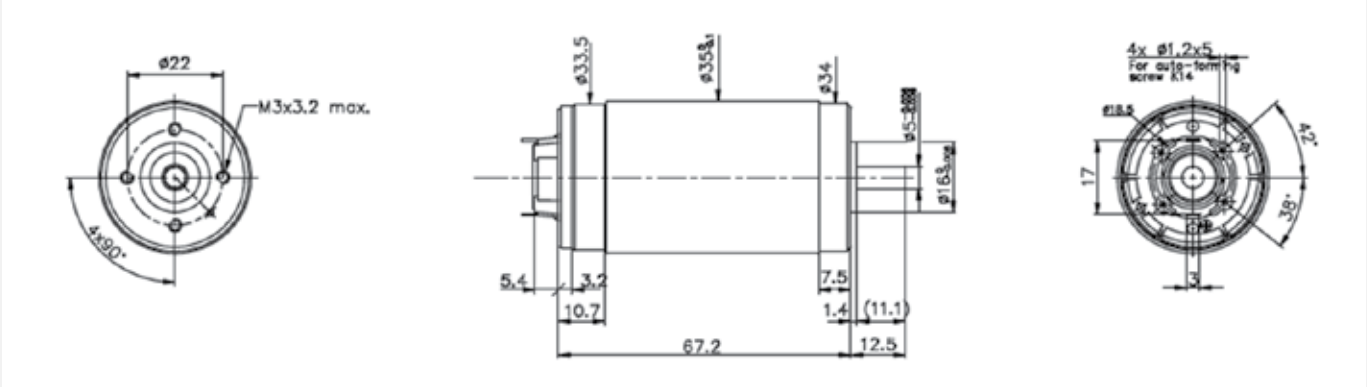


Dimensions in mm

### 35GLT2R82 **** .1

| Electrical Data | **** | 426P | 326P | 234E | 426SP | 426E | |
|---|---|---|---|---|---|---|---|
| 1 Nominal Voltage | V | 24 | 24 | 48 | 48 | 90 | Volt |
| 2 No-Load Speed | $n_0$ | 6,260 | 5,835 | 7,490 | 6,175 | 5,439 | rpm |
| 3 No-Load Current | $I_0$ | 120.0 | 120.0 | 70.0 | 60.0 | 60.0 | mA |
| 4 Terminal Resistance | R | 0.7 | 0.9 | 2.3 | 2.5 | 9.5 | Ω |
| 5 Output Power | $P_{2max.}$ | 136.0 | 124.0 | 122.0 | 142.0 | 150.0 | W |
| 6 Stall Torque | mNm | 1327 (187.92) | 1043 (147.71) | 1300 (184.1) | 1409 (199.54) | 1487 (210.58) | mNm (oz-in) |
| 7 Efficiency | $h_{max.}$ | 89 | 87 | 89 | 89 | 85 | % |
| 8 Max Continuous Speed | $n_{e\ max.}$ | 10,000 | 10,000 | 10,000 | 10,000 | 10,000 | rpm |
| 9 Max Continuous Torque | $M_{e\ max.}$ | 142 (18.7) | 132 (18.7) | 130 (18.41) | 150 (21.25) | 160 (22.66) | mNm (oz-in) |
| 10 Max Continuous Current | $I_{e\ max.}$ | 4.20 | 3.50 | 2.20 | 2.10 | 1.05 | A |
| 11 Back-EMF Constant | $k_E$ | 3.82 | 4.09 | 6.39 | 7.75 | 16.44 | mV/rpm |
| 12 Torque Constant | $k_M$ | 36.50 | 39.10 | 61.00 | 74.00 | 157.00 | mNm/A |
| 13 Motor Regulation | $R/k^2$ | 0.5 | 0.6 | 0.6 | 0.46 | 0.39 | $10^3$/Nms |
| 14 Friction Torque | $T_F$ | 4.38 (0.63) | 4.69 (0.67) | 4.27 (0.61) | 4.44 (0.63) | 9.42 (1.34) | mNm (oz-in) |
| 15 Rotor Inductance | L | 0.10 | 0.15 | 0.25 | 0.40 | 1.70 | mH |
| 16 Mechanical Time Constant | $t_m$ | 3.9 | 4.4 | 4.0 | 4.0 | 2.7 | ms |
| 17 Rotor Inertia | J | 83.00 | 75.00 | 65.00 | 85.00 | 70.00 | $g.cm^2$ |
| **General Data** | | | | | | | |
| 18 Thermal Resistance (rotor/body) | $R_{th1}$ / $R_{th2}$ | | | 4/8 | | | °C/W |
| 19 Thermal Time Constant (rotor/stator) | $t_{w1}/t_{w2}$ | | | 75/950 | | | S |
| 20 Operating Temperature Range: | motor | | | -30°C to 85°C (-22°F to 185°F) | | | °C (°F) |
| | rotor | | | 100°C (212°F) | | | °C (°F) |
| 21 Shaft Load Max.: | | | | With ball bearings | | | |
| (5mm from bearing) | -radial | | | 35.0 (125.9) | | | N (oz) |
| | -axial | | | 100 (359.6) | | | N (oz) |
| 22 Shaft Play: | -radial | | | negligible | | | mm (inch) |
| | -axial | | | negligible | | | mm (inch) |
| 23 Weight | g | | | 360 (12.7) | | | g (oz) |

| Execution Table | | | |
|---|---|---|---|
| Gearbox | Single Shaft | E9 | HEDS |
| R32 | 1 | 50 | Upon Request |
| R40 | 1 | 50 | Upon Request |

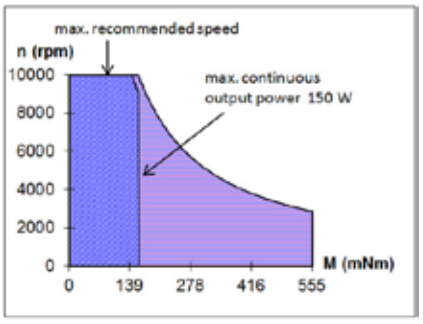


Continuous working range
Temporary working range

V121616

# Disc Magnet Motors

Get the simple motion control and precision of a stepper motor with the speed and acceleration of a brushless DC motor. The unique thin disc magnet enables finer step resolutions compared to a conventional permanent magnet stepper, while the low inertia and a shorter magnetic circuit with lower iron losses deliver significantly higher acceleration and maximum speed. These motors can be driven as a servo motor in applications requiring extremely fast incremental motion.

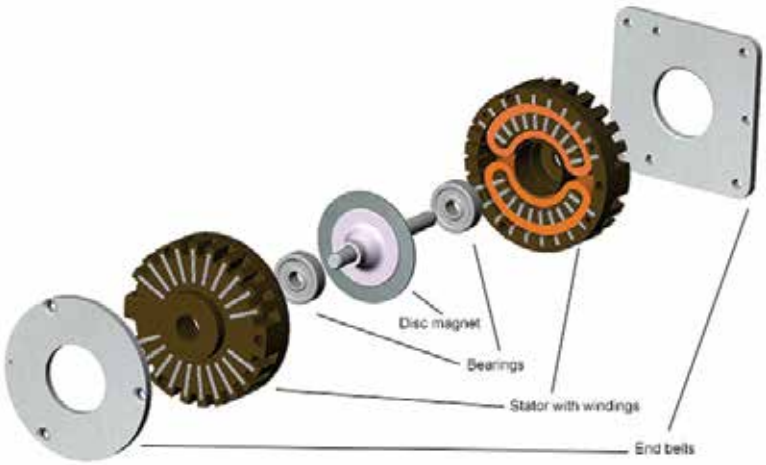


## Simple Speed, Power and Precision

| Feature | Details | Application Advantages |
|---|---|---|
| **Stepper motor design** | • No need for encoder feedback | • Simple open-loop positioning that can be digitally controlled |
| **Microstepping capability** | • Radial magnetization with high number of poles<br>• Much smaller step angles compared to conventional stepper | • Nearly servo-like accuracy in a simpler positioning system |
| **Thin multipolar rare earth disc magnet** | • Low rotor inertia | • High acceleration<br>• High start and stop frequencies<br>• High power rate |
| **Simple magnetic circuit** | • No coupling between phases<br>• Sinusoidal torque function<br>• Low detent torque | • Superior angular resolution in microstep mode |
| **Optimally dimensioned iron circuit** | • Torque constant linear up to two times nominal current | • High peak torques<br>• Capability to boost current |
| **Choice of sintered bronze bearings or ball bearings** | • Long bearing and lubrication life<br>• Choice of bearing performance characteristics | • Increased service life and reliability for any application |

## Exceptional Dynamic Performance

**Medical devices & clinical diagnostics**
- Laboratory automation
- Medical pipettes
- Diagnostic analyzers
- Medical analyzers
- Sample preparation workstations

**Security**
- Access systems
- Surveillance

**Aerospace**
- Surveillance camera systems
- Valve actuation

**Automation**
- Textile yarn guide
- Pick and place machines

**Other**
- Electronics assembly
- Semiconductor assembly systems

## Meet your Application's Working Point Requirements

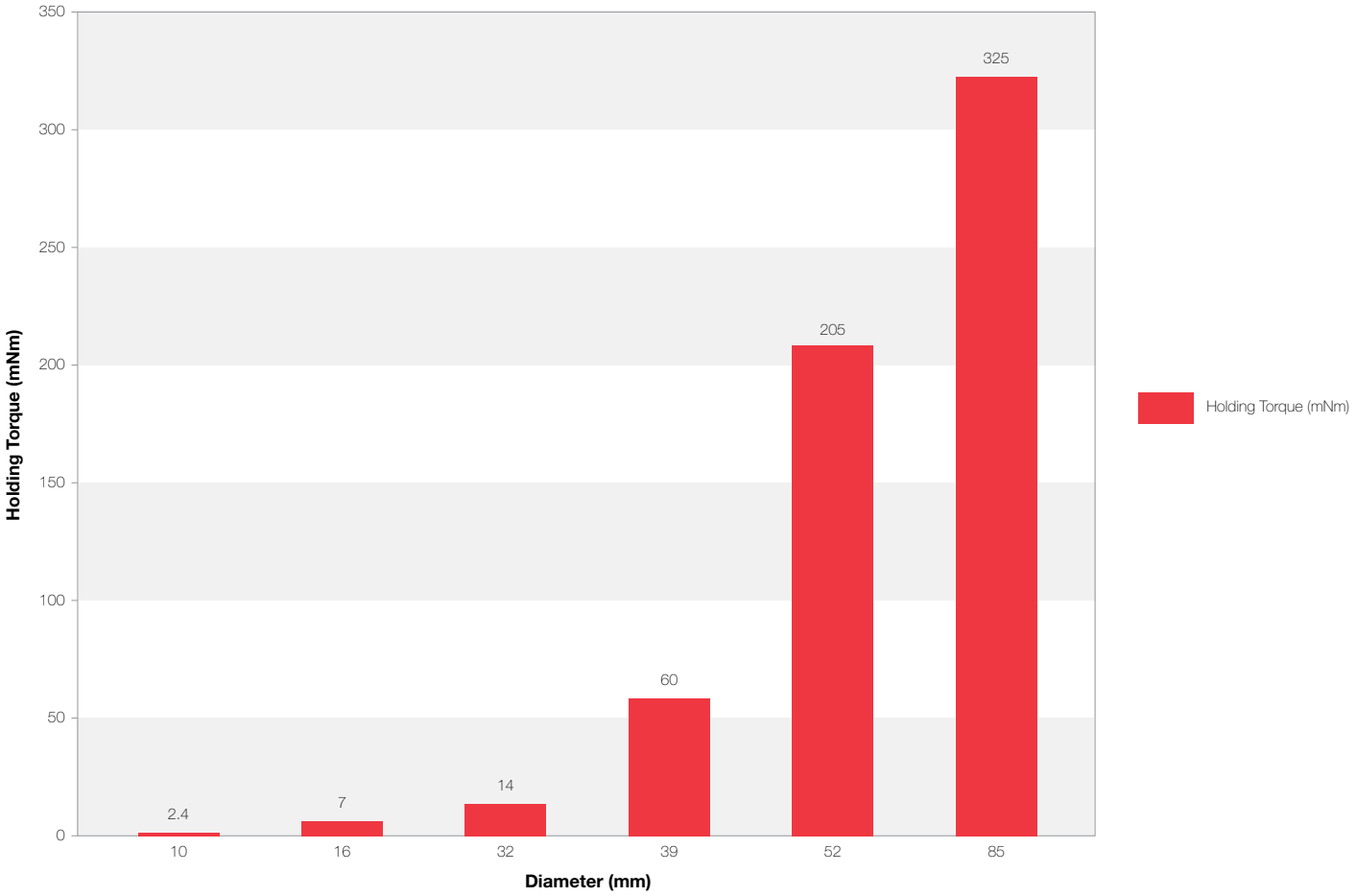


For complete product and application details, visit **portescap.com/disc-magnet**

## P010 104 Ø10mm 1.5 mNm

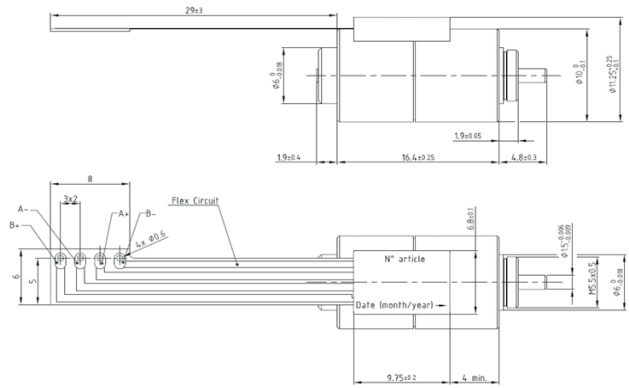


Dimensions in mm

### P010 104

| Electrical Data | | P010 104 020 21 | P010 104 003 21 | |
|---|---|---|---|---|
| 1 | Resistance per Phase, typ | 19.0 | 3.0 | Ohms |
| 2 | Inductance per Phase, typ | 13.7 | 1.8 | mH |
| 3 | Nominal Phase Current (2 ph. On) | 0.15 | 0.37 | A |
| 4 | Nominal Phase Current (1 ph. On) | 0.21 | 0.52 | A |
| 5 | Back EMF Amplitude | 1.10 | 0.46 | V/kstep/s |
| **Coil independent parameters** | | | | |
| 6 | Holding Torque, nominal current | 1.5 (0.21) | | mNm (oz-in) |
| 7 | Holding Torque, 1.5x nominal current (1) | 2.1 (0.3) | | mNm (oz-in) |
| 8 | Detent Torque | 0.9 (0.13) | | mNm (oz-in) |
| 9 | Rotor Inertia | 0.070 | | $kgm^2 \times 10^{-7}$ |
| 10 | Step Angle | 9 | | Degree |
| 11 | Absolute Accuracy 2 ph. On, Full step mode | +/- 5% | | % Full Step |
| 12 | Steps Per Revolution | 40 | | |
| 13 | Ambient Temperature Range (operating) | -20 to 50 (-4 to 122) | | ℃ (℉) |
| 14 | Maximum Coil Temperature | 130 (266) | | ℃ (℉) |
| 15 | Thermal Resistance Coil-ambient (2) | 100 | | ℃/W |
| 16 | Natural Resonance Frequency (nominal current) | 230 | | Hz |
| 17 | Electrical Time Constant | 0.60 | | ms |
| 18 | Angular Acceleration (nominal current) | 210,000 | | $rad/s^2$ |
| 19 | Bearing Type | Ball | | |
| 20 | Dielectric Withstanding Voltage | 500 VRMS for 5 seconds | | VAC |
| 21 | Radial Shaft Play | 30 @ 2N | | µm |
| 22 | Axial Shaft Play | 40 @ 2N | | µm |
| 23 | Maximum Radial Shaft Load | 2.5 (9) | | N (oz) |
| 24 | Maximum Axial Shaft Load (3) | 2.5 (9) | | N (oz) |
| 25 | Weight | 9 (0.32) | | g (oz) |
| 26 | Power Rate (nominal current) | 0.5 | | kW/s |

(1) Measured with 1 phase ON. The max coil temperature must be respected
(2) Motor unmounted
(3) Shaft must be supported when press-fitting a pulley or pinion

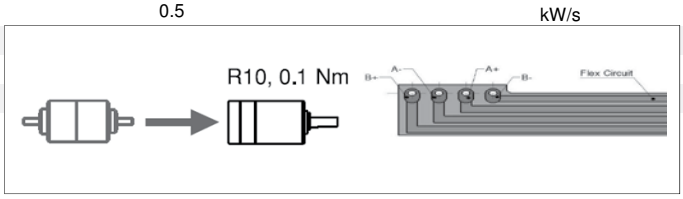


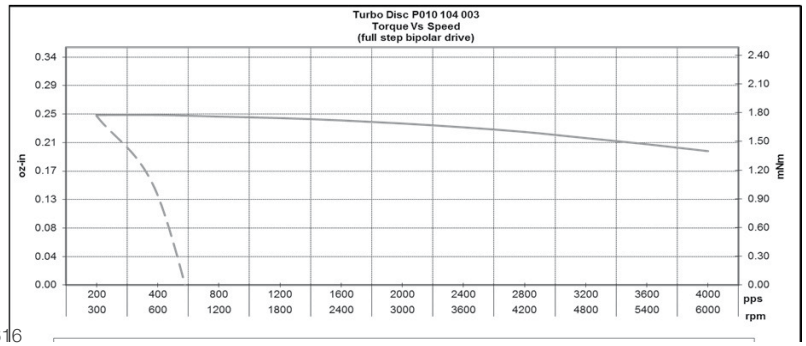


V121616

## P010 064

Ø10mm 1.8 mNm

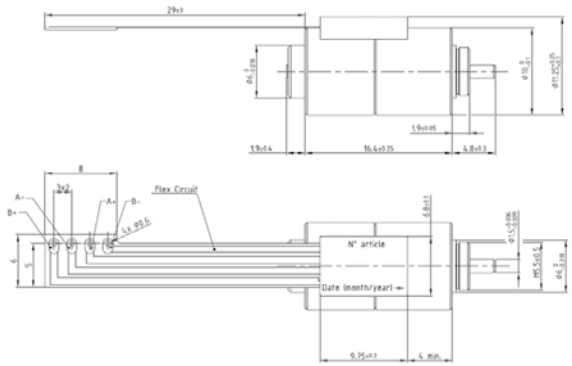


Dimensions in mm

### P010 064

| Electrical Data | | P010 064 020 21 | P010 064 003 21 | |
|---|---|---|---|---|
| 1 | Resistance per Phase, typ | 19.0 | 3.0 | Ohms |
| 2 | Inductance per Phase, typ | 13.7 | 1.8 | mH |
| 3 | Nominal Phase Current (2 ph. On) | 0.15 | 0.37 | A |
| 4 | Nominal Phase Current (1 ph. On) | 0.21 | 0.52 | A |
| 5 | Back EMF Amplitude | 2.20 | 0.94 | V/kstep/s |
| **Coil independent parameters** | | | | |
| 6 | Holding Torque, nominal current | 1.8 (0.25) | | mNm (oz-in) |
| 7 | Holding Torque, 1.5x nominal current (1) | 2.5 (0.35) | | mNm (oz-in) |
| 8 | Detent Torque | 0.9 (0.13) | | mNm (oz-in) |
| 9 | Rotor Inertia | 0.070 | | $kgm^2 \times 10^{-7}$ |
| 10 | Step Angle | 15 | | Degree |
| 11 | Absolute Accuracy 2 ph. On, Full step mode | +/- 5% | | % Full Step |
| 12 | Steps Per Revolution | 24 | | |
| 13 | Ambient Temperature Range (operating) | -20 to 50 (-4 to 122) | | ℃ (℉) |
| 14 | Maximum Coil Temperature | 130 (266) | | ℃ (℉) |
| 15 | Thermal Resistance Coil-ambient (2) | 100 | | ℃/W |
| 16 | Natural Resonance Frequency (nominal current) | 200 | | Hz |
| 17 | Electrical Time Constant | 0.60 | | ms |
| 18 | Angular Acceleration (nominal current) | 260,000 | | $rad/s^2$ |
| 19 | Bearing Type | Ball | | |
| 20 | Dielectric Withstanding Voltage | 500 VRMS for 5 seconds | | VAC |
| 21 | Radial Shaft Play | 30 @ 2N | | µm |
| 22 | Axial Shaft Play | 40 @ 2N | | µm |
| 23 | Maximum Radial Shaft Load | 2.5 (9) | | N (oz) |
| 24 | Maximum Axial Shaft Load (3) | 2.5 (9) | | N (oz) |
| 25 | Weight | 9 (0.32) | | g (oz) |
| 26 | Power Rate (nominal current) | 0.5 | | kW/s |

(1) Measured with 1 phase ON. The max coil temperature must be respected

(2) Motor unmounted

(3) Shaft must be supported when press-fitting a pulley or pinion

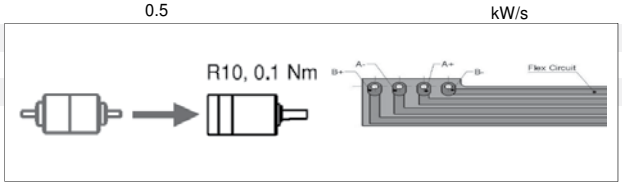


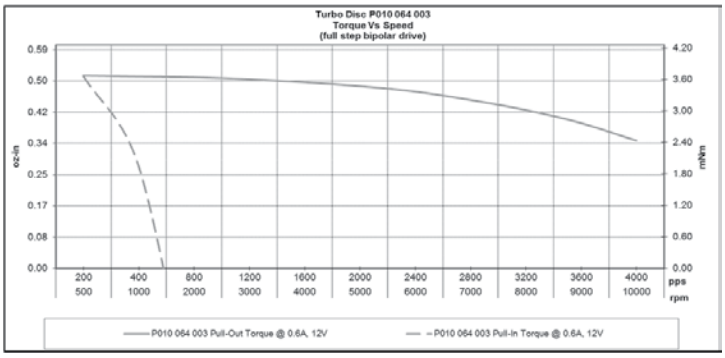


V121616

## PH010 104

Ø10mm 2.1 mNm

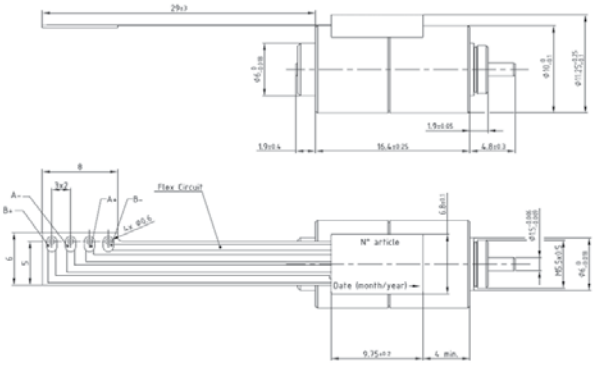


Dimensions in mm

### PH010 104

| Electrical Data | | PH010 104 020 02 | PH010 104 010 02 | PH010 104 003 02 | |
|---|---|---|---|---|---|
| 1 | Resistance per Phase, typ | 19.0 | 10.0 | 3.0 | Ohms |
| 2 | Inductance per Phase, typ | 8.4 | 4.2 | 1.3 | mH |
| 3 | Nominal Phase Current (2 ph. On) | 0.15 | 0.20 | 0.37 | A |
| 4 | Nominal Phase Current (1 ph. On) | 0.21 | 0.28 | 0.52 | A |
| 5 | Back EMF Amplitude | 1.58 | 1.18 | 0.64 | V/kstep/s |
| **Coil independent parameters** | | | | | |
| 6 | Holding Torque, nominal current | | 2.1 (0.3) | | mNm (oz-in) |
| 7 | Holding Torque, 1.5x nominal current (1) | | 3.16 (0.45) | | mNm (oz-in) |
| 8 | Detent Torque | | 1 (0.14) | | mNm (oz-in) |
| 9 | Rotor Inertia | | 0.070 | | $kgm^2 \times 10^{-7}$ |
| 10 | Step Angle | | 9 | | Degree |
| 11 | Absolute Accuracy 2 ph. On, Full step mode | | +/- 5% | | % Full Step |
| 12 | Steps Per Revolution | | 40 | | |
| 13 | Ambient Temperature Range (operating) | | -20 to 50 (-4 to 122) | | ℃ (℉) |
| 14 | Maximum Coil Temperature | | 130 (266) | | ℃ (℉) |
| 15 | Thermal Resistance Coil-ambient (2) | | 100 | | ℃/W |
| 16 | Natural Resonance Frequency (nominal current) | | 276 | | Hz |
| 17 | Electrical Time Constant | | 0.42 | | ms |
| 18 | Angular Acceleration (nominal current) | | 301,758 | | $rad/s^2$ |
| 19 | Bearing Type | | Ball | | |
| 20 | Dielectric Withstanding Voltage | | 500 VRMS for 5 seconds | | VAC |
| 21 | Radial Shaft Play | | 30@2N | | µm |
| 22 | Axial Shaft Play | | 40@2N | | µm |
| 23 | Maximum Radial Shaft Load | | 2.5 (9) | | N (oz) |
| 24 | Maximum Axial Shaft Load (3) | | 2.5 (9) | | N (oz) |
| 25 | Weight | | 9 (0.32) | | g (oz) |
| 26 | Power Rate (nominal current) | | 0.5 | | kW/s |

(1) Measured with 1 phase ON. The max coil temperature must be respected

(2) Motor unmounted

(3) Shaft must be supported when press-fitting a pulley or pinion

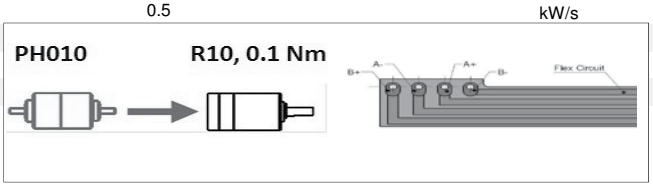


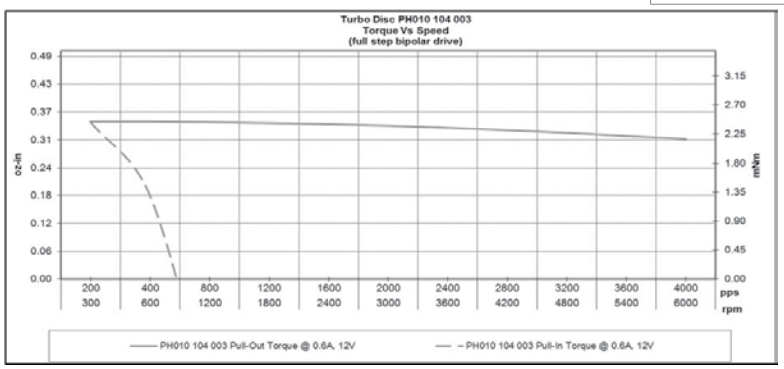


V121616

## PH010 064

Ø10mm 2.4 mNm

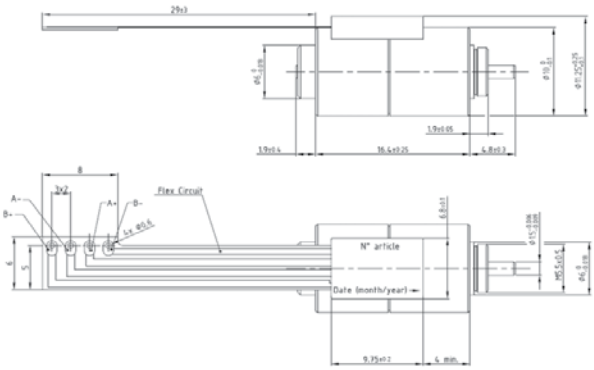


Dimensions in mm

### PH010 064

| Electrical Data | | PH010 064 020 02 | PH010 064 010 02 | PH010 064 003 02 | |
|---|---|---|---|---|---|
| 1 | Resistance per Phase, typ | 19.0 | 10.0 | 3.0 | Ohms |
| 2 | Inductance per Phase, typ | 8.4 | 4.2 | 1.3 | mH |
| 3 | Nominal Phase Current (2 ph. On) | 0.15 | 0.20 | 0.37 | A |
| 4 | Nominal Phase Current (1 ph. On) | 0.21 | 0.28 | 0.52 | A |
| 5 | Back EMF Amplitude | 3.00 | 2.25 | 1.21 | V/kstep/s |
| **Coil independent parameters** | | | | | |
| 6 | Holding Torque, nominal current | | 2.4 (0.34) | | mNm (oz-in) |
| 7 | Holding Torque, 1.5x nominal current (1) | | 3.6 (0.51) | | mNm (oz-in) |
| 8 | Detent Torque | | 1.1 (0.16) | | mNm (oz-in) |
| 9 | Rotor Inertia | | 0.070 | | $kgm^2 \times 10^{-7}$ |
| 10 | Step Angle | | 15 | | Degree |
| 11 | Absolute Accuracy 2 ph. On, Full step mode | | +/- 5% | | % Full Step |
| 12 | Steps Per Revolution | | 24 | | |
| 13 | Ambient Temperature Range (operating) | | -20 to 50 (-4 to 122) | | °C (°F) |
| 14 | Maximum Coil Temperature | | 130 (266) | | °C (°F) |
| 15 | Thermal Resistance Coil-ambient (2) | | 100 | | °C/W |
| 16 | Natural Resonance Frequency (nominal current) | | 229 | | Hz |
| 17 | Electrical Time Constant | | 0.42 | | ms |
| 18 | Angular Acceleration (nominal current) | | 343,775 | | $rad/s^2$ |
| 19 | Bearing Type | | Ball | | |
| 20 | Dielectric Withstanding Voltage | | 500 VRMS for 5 seconds | | VAC |
| 21 | Radial Shaft Play | | 30@2N | | µm |
| 22 | Axial Shaft Play | | 40@2N | | µm |
| 23 | Maximum Radial Shaft Load | | 2.5 (9) | | N (oz) |
| 24 | Maximum Axial Shaft Load (3) | | 2.5 (9) | | N (oz) |
| 25 | Weight | | 9 (0.32) | | g (oz) |
| 26 | Power Rate (nominal current) | | 0.5 | | kW/s |

(1) Measured with 1 phase ON. The max coil temperature must be respected

(2) Motor unmounted

(3) Shaft must be supported when press-fitting a pulley or pinion

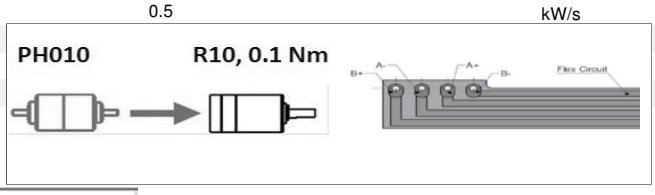


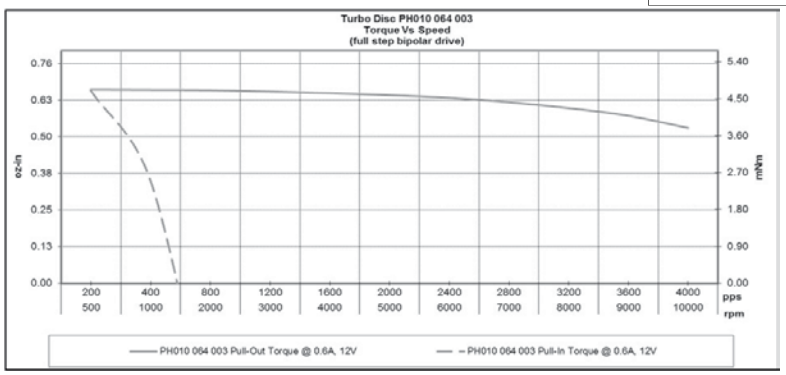


V121616

## P110 104

Ø16mm 6.2 mNm

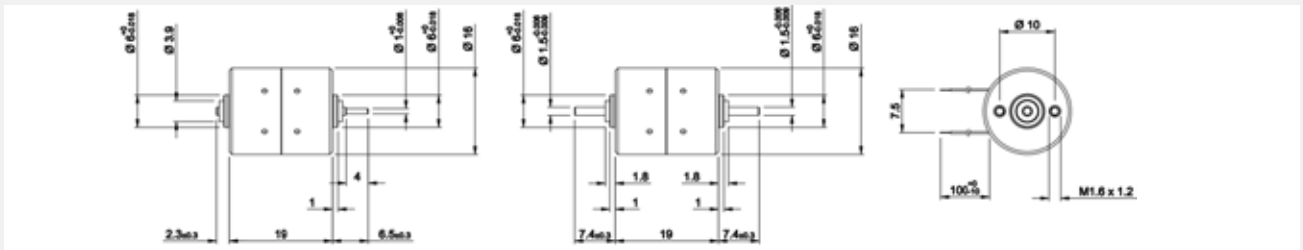


P110 104 xxx 08 P110 104 xxx 12

Dimensions in mm

### P110 104

| Electrical Data | | P110 104 068 08/12 | P110 104 015 08/12 | P110 104 2.5 08/12 | |
|---|---|---|---|---|---|
| 1 | Resistance per Phase, typ | 62.0 | 15.0 | 2.5 | Ohms |
| 2 | Inductance per Phase, typ | 46.0 | 12.0 | 2.2 | mH |
| 3 | Nominal Phase Current (2 ph. On) | 0.12 | 0.25 | 0.63 | A |
| 4 | Nominal Phase Current (1 ph. On) | 0.17 | 0.35 | 0.90 | A |
| 5 | Back EMF Amplitude | 5.70 | 2.80 | 1.10 | V/kstep/s |
| **Coil independent parameters** | | | | | |
| 6 | Holding Torque, nominal current | | 6.2 (0.88) | | mNm (oz-in) |
| 7 | Holding Torque, 1.5x nominal current (1) | | 8.7 (1.23) | | mNm (oz-in) |
| 8 | Detent Torque | | 1.65 (0.24) | | mNm (oz-in) |
| 9 | Rotor Inertia | | 0.400 | | $kgm^2 \times 10^{-7}$ |
| 10 | Step Angle | | 9 | | Degree |
| 11 | Absolute Accuracy 2 ph. On, Full step mode | | +/- 5% | | % Full Step |
| 12 | Steps Per Revolution | | 40 | | |
| 13 | Ambient Temperature Range (operating) | | -20 to 50 (-4 to 122) | | °C (°F) |
| 14 | Maximum Coil Temperature | | 130 (266) | | °C (°F) |
| 15 | Thermal Resistance Coil-ambient (2) | | 45 | | °C/W |
| 16 | Natural Resonance Frequency (nominal current) | | 200 | | Hz |
| 17 | Electrical Time Constant | | 0.80 | | ms |
| 18 | Angular Acceleration (nominal current) | | 155,000 | | $rad/s^2$ |
| 19 | Bearing Type | | Ball | | |
| 20 | Dielectric Withstanding Voltage | | 500 VRMS for 5 seconds (30@2N) | | VAC |
| 21 | Radial Shaft Play | | 30@2N | | µm |
| 22 | Axial Shaft Play | | 40@2N | | µm |
| 23 | Maximum Radial Shaft Load | | 2.5 (9) | | N (oz) |
| 24 | Maximum Axial Shaft Load (3) | | 2.5 (9) | | N (oz) |
| 25 | Weight | | 23 (0.81) | | g (oz) |
| 26 | Power Rate (nominal current) | | 1.2 | | kW/s |

(1) Measured with 1 phase ON. The max coil temperature must be respected

(2) Motor unmounted

(3) Shaft must be supported when press-fitting a pulley or pinion

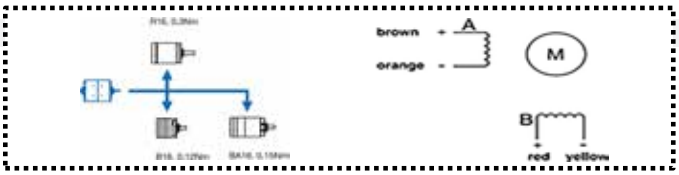


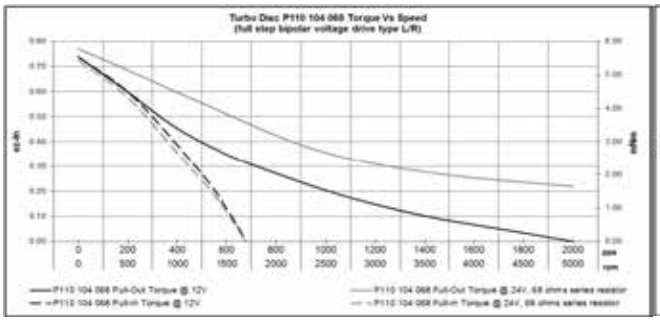


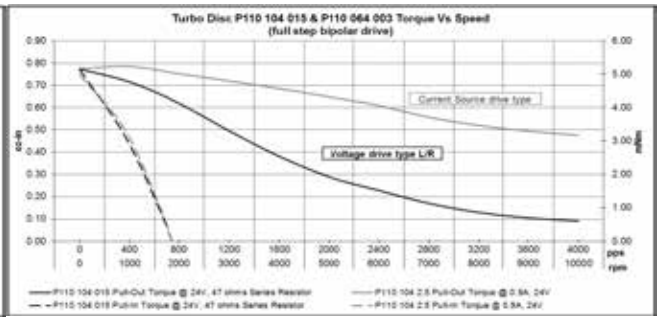


V121616

## P110 064

Ø16mm 7 mNm

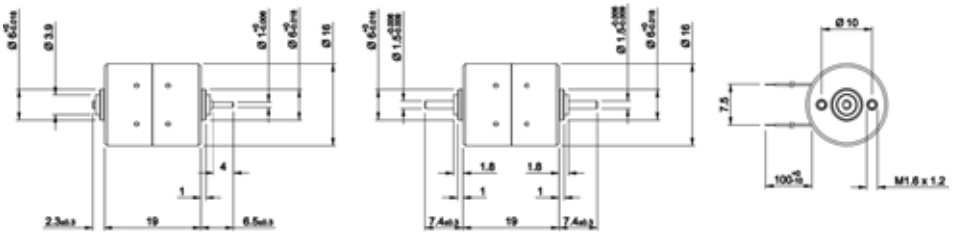

P110 064 xxx 08 P110 064 xxx 12

Dimensions in mm

### P110 064

| Electrical Data | | P110 064 068 08/12 | P110 064 015 08/12 | P110 064 2.5 08/12 | |
|---|---|---|---|---|---|
| 1 | Resistance per Phase, typ | 62.0 | 15.0 | 2.5 | Ohms |
| 2 | Inductance per Phase, typ | 46.0 | 12.0 | 2.2 | mH |
| 3 | Nominal Phase Current (2 ph. On) | 0.12 | 0.25 | 0.63 | A |
| 4 | Nominal Phase Current (1 ph. On) | 0.17 | 0.35 | 0.90 | A |
| 5 | Back EMF Amplitude | 10.80 | 5.20 | 2.00 | V/kstep/s |
| **Coil independent parameters** | | | | | |
| 6 | Holding Torque, nominal current | | 7 (0.99) | | mNm (oz-in) |
| 7 | Holding Torque, 1.5x nominal current (1) | | 10 (1.42) | | mNm (oz-in) |
| 8 | Detent Torque | | 1.65 (0.24) | | mNm (oz-in) |
| 9 | Rotor Inertia | | 0.400 | | $kgm^2 \times 10^{-7}$ |
| 10 | Step Angle | | 15 | | Degree |
| 11 | Absolute Accuracy 2 ph. On, Full step mode | | +/- 5% | | % Full Step |
| 12 | Steps Per Revolution | | 24 | | |
| 13 | Ambient Temperature Range (operating) | | -20 to 50 (-4 to 122) | | °C (°F) |
| 14 | Maximum Coil Temperature | | 130 (266) | | °C (°F) |
| 15 | Thermal Resistance Coil-ambient (2) | | 45 | | °C/W |
| 16 | Natural Resonance Frequency (nominal current) | | 160 | | Hz |
| 17 | Electrical Time Constant | | 0.80 | | ms |
| 18 | Angular Acceleration (nominal current) | | 175,000 | | $rad/s^2$ |
| 19 | Bearing Type | | Ball | | |
| 20 | Dielectric Withstanding Voltage | | 500 VRMS for 5 seconds (30@2N) | | VAC |
| 21 | Radial Shaft Play | | 30@2N | | µm |
| 22 | Axial Shaft Play | | 40@2N | | µm |
| 23 | Maximum Radial Shaft Load | | 2.5 (9) | | N (oz) |
| 24 | Maximum Axial Shaft Load (3) | | 2.5 (9) | | N (oz) |
| 25 | Weight | | 23 (0.81) | | g (oz) |
| 26 | Power Rate (nominal current) | | 1.2 | | kW/s |

(1) Measured with 1 phase ON. The max coil temperature must be respected
(2) Motor unmounted
(3) Shaft must be supported when press-fitting a pulley or pinion

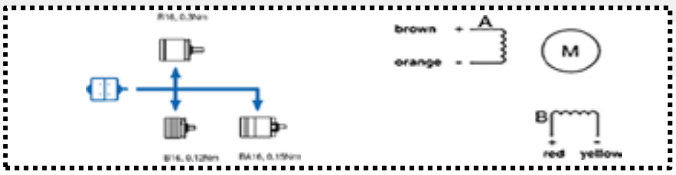


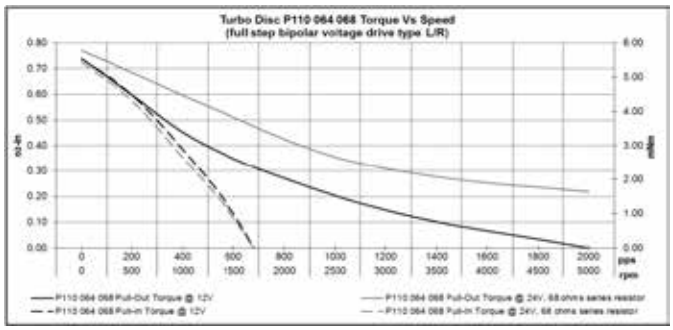


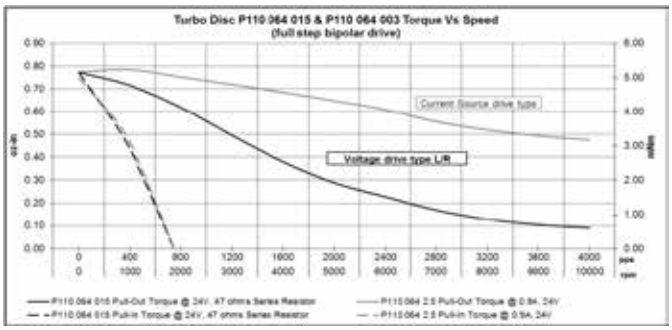


V121616

## P310 Ø32mm 14 mNm

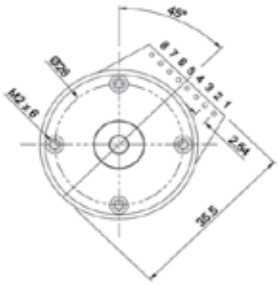



P310 158 xxx 09

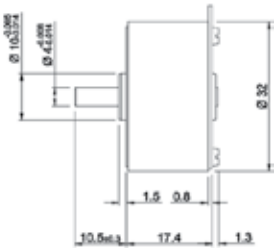


P310 158 xxx 10

Dimensions in mm

## P310

| | Electrical Data | P310 158 170 09/10(series) | P310 158 170 09/10 (parallel) | P310 158 005 09/10 (series) | P310 158 005 09/10 (parallel) | |
|---|---|---|---|---|---|---|
| 1 | Resistance per Phase, typ | 332.0 | 83.0 | 10.5 | 2.6 | Ohms |
| 2 | Inductance per Phase, typ | 184.0 | 46.0 | 6.4 | 1.6 | mH |
| 3 | Nominal Phase Current (2 ph. On) | 0.06 | 0.12 | 0.36 | 0.72 | A |
| 4 | Nominal Phase Current (1 ph. On) | 0.09 | 0.17 | 0.51 | 1.00 | A |
| 5 | Back EMF Amplitude | 18.00 | 9.00 | 3.20 | 1.60 | V/kstep/s |
| | **Coil independent parameters** | | | | | |
| 6 | Holding Torque, nominal current | | 14 (2) | | | mNm (oz-in) |
| 7 | Holding Torque, 1.5x nominal current (1) | | 20 (2.83) | | | mNm (oz-in) |
| 8 | Detent Torque | | 2.6 (0.37) | | | mNm (oz-in) |
| 9 | Rotor Inertia | | 0.860 | | | $kgm^2 \times 10^{-7}$ |
| 10 | Step Angle | | 6 | | | Degree |
| 11 | Absolute Accuracy 2 ph. On, Full step mode | | +/- 5% | | | % Full Step |
| 12 | Steps Per Revolution | | 60 | | | |
| 13 | Ambient Temperature Range (operating) | | -20 to 50 (-4 to 122) | | | ℃ (℉) |
| 14 | Maximum Coil Temperature | | 130 (266) | | | ℃ (℉) |
| 15 | Thermal Resistance Coil-ambient (2) | | 25 | | | ℃/W |
| 16 | Natural Resonance Frequency (nominal current) | | 230 | | | Hz |
| 17 | Electrical Time Constant | | 0.60 | | | ms |
| 18 | Angular Acceleration (nominal current) | | 140,000 | | | $rad/s^2$ |
| 19 | Bearing Type | | Sleeve or Ball | | | |
| 20 | Dielectric Withstanding Voltage | | 500 VRMS for 5 seconds (35@5N / 15@1N) | | | VAC |
| 21 | Radial Shaft Play | | 35@5N / 15@1N | | | µm |
| 22 | Axial Shaft Play | | 100@5N / 10@1N | | | µm |
| 23 | Maximum Radial Shaft Load | | 1 / 10 (3.6 / 36) | | | N (oz) |
| 24 | Maximum Axial Shaft Load (3) | | 0.5 / 20 ( 1.8 / 72) | | | N (oz) |
| 25 | Weight | | 40 (1.4) | | | g (oz) |
| 26 | Power Rate (nominal current) | | 1.7 | | | kW/s |

(1) Measured with 1 phase ON. The max coil temperature must be respected

(2) Motor unmounted

(3) Shaft must be supported when press-fitting a pulley or pinion

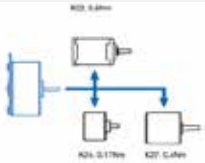


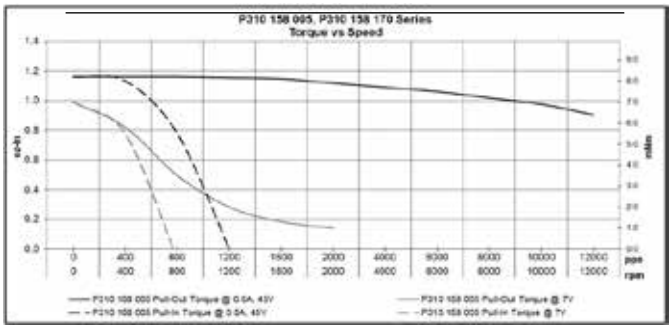


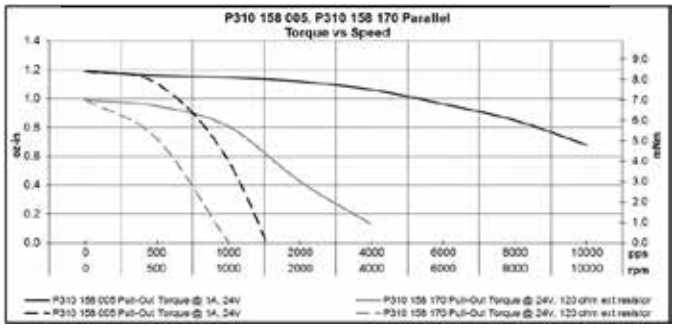


V121616

## P430

Ø39mm 60 mNm

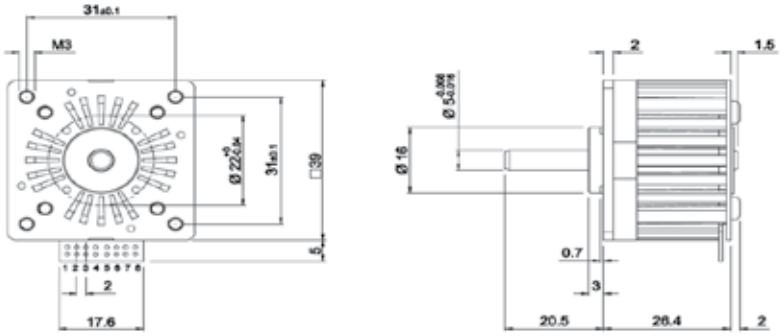


Dimensions in mm

### P430

| Electrical Data | | P430 258 013 01 (series) | P430 258 013 01 (parallel) | P430 258 005 01 (series) | P430 258 005 01 (parallel) | |
|---|---|---|---|---|---|---|
| 1 | Resistance per Phase, typ | 26.0 | 6.5 | 10.0 | 2.5 | Ohms |
| 2 | Inductance per Phase, typ | 40.0 | 10.0 | 14.0 | 3.5 | mH |
| 3 | Nominal Phase Current (2 ph. On) | 0.34 | 0.68 | 0.56 | 1.12 | A |
| 4 | Nominal Phase Current (1 ph. On) | 0.50 | 1.00 | 0.80 | 1.60 | A |
| 5 | Back EMF Amplitude | 7.50 | 3.80 | 4.70 | 2.30 | V/kstep/s |
| **Coil independent parameters** | | | | | | |
| 6 | Holding Torque, nominal current | | 60 (8.5) | | | mNm (oz-in) |
| 7 | Holding Torque, 1.5x nominal current (1) | | 86 (12) | | | mNm (oz-in) |
| 8 | Detent Torque | | 6.5 (0.93) | | | mNm (oz-in) |
| 9 | Rotor Inertia | | 3.000 | | | $kgm^2 \times 10^{-7}$ |
| 10 | Step Angle | | 3.6 | | | Degree |
| 11 | Absolute Accuracy 2 ph. On, Full step mode | | +/- 5% | | | % Full Step |
| 12 | Steps Per Revolution | | 100 | | | |
| 13 | Ambient Temperature Range (operating) | | -20 to 50 (-4 to 122) | | | ℃ (℉) |
| 14 | Maximum Coil Temperature | | 130 (266) | | | ℃ (℉) |
| 15 | Thermal Resistance Coil-ambient (2) | | 11 | | | ℃/W |
| 16 | Natural Resonance Frequency (nominal current) | | 360 | | | Hz |
| 17 | Electrical Time Constant | | 1.50 | | | ms |
| 18 | Angular Acceleration (nominal current) | | 200,000 | | | $rad/s^2$ |
| 19 | Bearing Type | | Ball | | | |
| 20 | Dielectric Withstanding Voltage | | 500 VRMS for 5 seconds (15@5N) | | | VAC |
| 21 | Radial Shaft Play | | 15@5N | | | µm |
| 22 | Axial Shaft Play | | 10@5N | | | µm |
| 23 | Maximum Radial Shaft Load | | 20 (72) | | | N (oz) |
| 24 | Maximum Axial Shaft Load (3) | | 30 (108) | | | N (oz) |
| 25 | Weight | | 100 (3.5) | | | g (oz) |
| 26 | Power Rate (nominal current) | | 12.0 | | | kW/s |

(1) Measured with 1 phase ON. The max coil temperature must be respected

(2) Motor unmounted

(3) Shaft must be supported when press-fitting a pulley or pinion


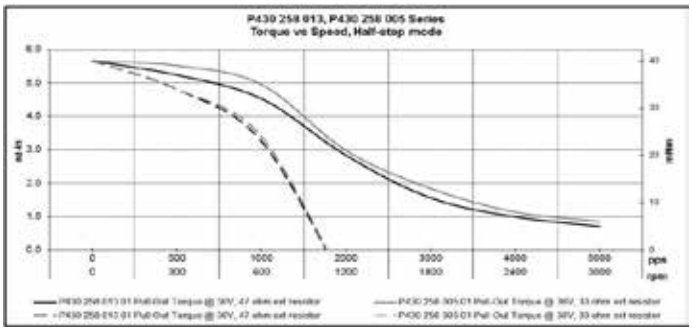


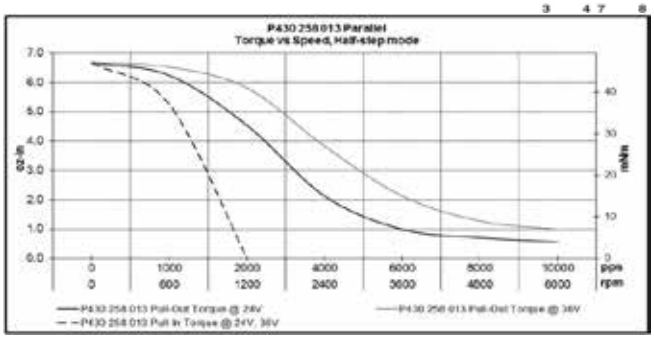


V121616

## P520

Ø52mm 120 mNm

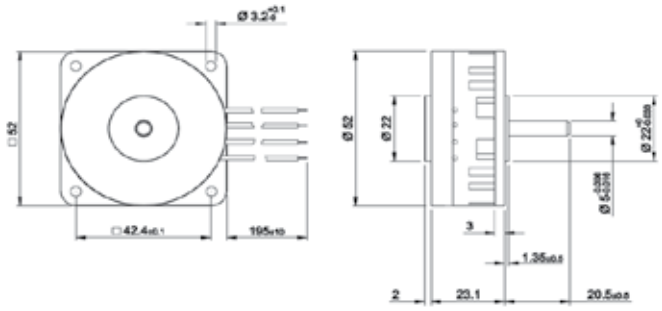

Dimensions in mm

### P520

| Electrical Data | | P520 254 013 60 | P520 254 004 60 | P520 254 0.7 60 | |
|---|---|---|---|---|---|
| 1 | Resistance per Phase, typ | 13.5 | 4.4 | 0.7 | Ohms |
| 2 | Inductance per Phase, typ | 27.0 | 8.0 | 1.3 | mH |
| 3 | Nominal Phase Current (2 ph. On) | 0.50 | 0.90 | 2.30 | A |
| 4 | Nominal Phase Current (1 ph. On) | 0.75 | 1.30 | 3.30 | A |
| 5 | Back EMF Amplitude | 9.80 | 5.50 | 2.10 | V/kstep/s |
| **Coil independent parameters** | | | | | |
| 6 | Holding Torque, nominal current | | 120 (17) | | mNm (oz-in) |
| 7 | Holding Torque, 1.5x nominal current (1) | | 170 (24) | | mNm (oz-in) |
| 8 | Detent Torque | | 18 (2.55) | | mNm (oz-in) |
| 9 | Rotor Inertia | | 12.000 | | $kgm^2 \times 10^{-7}$ |
| 10 | Step Angle | 4 | 3.6 | 3.6 | Degree |
| 11 | Absolute Accuracy 2 ph. On, Full step mode | | +/- 5% | | % Full Step |
| 12 | Steps Per Revolution | | 100 | | |
| 13 | Ambient Temperature Range (operating) | | -20 to 50 (-4 to 122) | | ℃ (℉) |
| 14 | Maximum Coil Temperature | | 130 (266) | | ℃ (℉) |
| 15 | Thermal Resistance Coil-ambient (2) | 10 | 9.5 | 9.5 | ℃/W |
| 16 | Natural Resonance Frequency (nominal current) | | 250 | | Hz |
| 17 | Electrical Time Constant | | 1.80 | | ms |
| 18 | Angular Acceleration (nominal current) | | 100,000 | | $rad/s^2$ |
| 19 | Bearing Type | | Ball | | |
| 20 | Dielectric Withstanding Voltage | | 500 VRMS for 5 seconds (15@5N) | | VAC |
| 21 | Radial Shaft Play | | 15@5N | | µm |
| 22 | Axial Shaft Play | | 10@5N | | µm |
| 23 | Maximum Radial Shaft Load | | 20 (72) | | N (oz) |
| 24 | Maximum Axial Shaft Load (3) | | 30 (108) | | N (oz) |
| 25 | Weight | | 180 (6.3) | | g (oz) |
| 26 | Power Rate (nominal current) | | 12.0 | | kW/s |

(1) Measured with 1 phase ON. The max coil temperature must be respected

(2) Motor unmounted

(3) Shaft must be supported when press-fitting a pulley or pinion



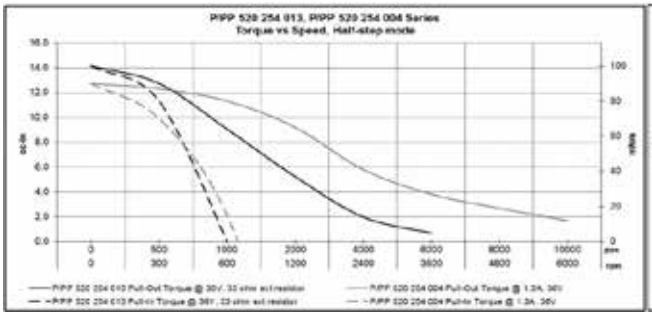


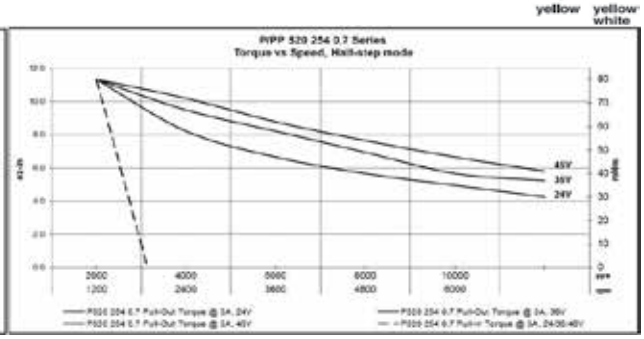


V121616

## PP520

Ø52mm 120 mNm

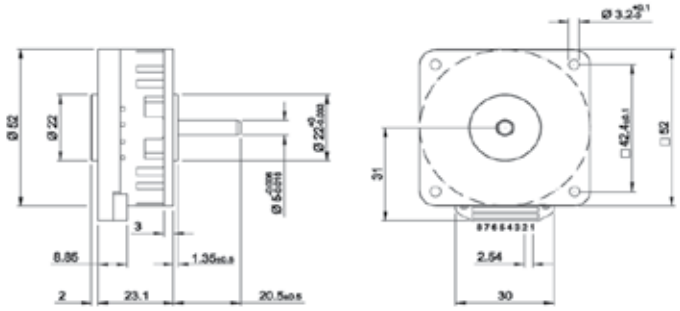

Dimensions in mm

### PP520

| Electrical Data | | PP520 258 013 01 | PP520 258 004 01 | PP520 258 0.7 01 | |
|---|---|---|---|---|---|
| 1 | Resistance per Phase, typ | 13.5 | 4.4 | 0.7 | Ohms |
| 2 | Inductance per Phase, typ | 27.0 | 8.0 | 1.3 | mH |
| 3 | Nominal Phase Current (2 ph. On) | 0.50 | 0.90 | 2.30 | A |
| 4 | Nominal Phase Current (1 ph. On) | 0.75 | 1.30 | 3.30 | A |
| 5 | Back EMF Amplitude | 9.80 | 5.50 | 2.10 | V/kstep/s |
| **Coil independent parameters** | | | | | |
| 6 | Holding Torque, nominal current | | 120 (17) | | mNm (oz-in) |
| 7 | Holding Torque, 1.5x nominal current (1) | | 170 (24) | | mNm (oz-in) |
| 8 | Detent Torque | | 18 (2.55) | | mNm (oz-in) |
| 9 | Rotor Inertia | | 12.000 | | $kgm^2 \times 10^{-7}$ |
| 10 | Step Angle | 4 | 3.6 | 3.6 | Degree |
| 11 | Absolute Accuracy 2 ph. On, Full step mode | | +/- 5% | | % Full Step |
| 12 | Steps Per Revolution | | 100 | | |
| 13 | Ambient Temperature Range (operating) | | -20 to 50 (-4 to 122) | | °C (°F) |
| 14 | Maximum Coil Temperature | | 130 (266) | | °C (°F) |
| 15 | Thermal Resistance Coil-ambient (2) | 10 | 9.5 | 9.5 | °C/W |
| 16 | Natural Resonance Frequency (nominal current) | | 250 | | Hz |
| 17 | Electrical Time Constant | | 1.80 | | ms |
| 18 | Angular Acceleration (nominal current) | | 100,000 | | $rad/s^2$ |
| 19 | Bearing Type | | Ball | | |
| 20 | Dielectric Withstanding Voltage | | 500 VRMS for 5 seconds (15@5N) | | VAC |
| 21 | Radial Shaft Play | | 15@5N | | µm |
| 22 | Axial Shaft Play | | 10@5N | | µm |
| 23 | Maximum Radial Shaft Load | | 20 (72) | | N (oz) |
| 24 | Maximum Axial Shaft Load (3) | | 30 (108) | | N (oz) |
| 25 | Weight | | 180 (6.3) | | g (oz) |
| 26 | Power Rate (nominal current) | | 12.0 | | kW/s |

(1) Measured with 1 phase ON. The max coil temperature must be respected

(2) Motor unmounted

(3) Shaft must be supported when press-fitting a pulley or pinion

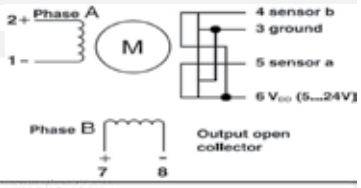


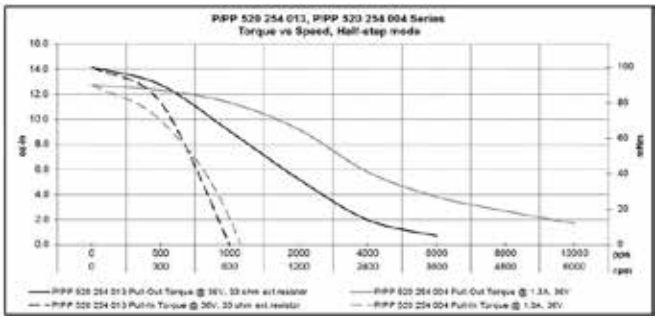


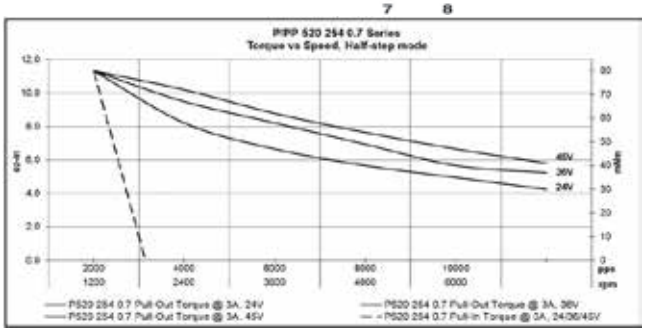


V121616

## P532 Ø52mm 205 mNm

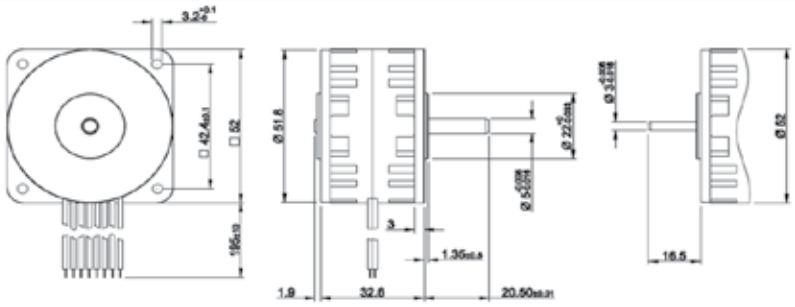

Dimensions in mm

P532 258 xxx 10

P532 258 xxx 84

## P532

| Electrical Data | | P532 258 012 10/84 (series) | P532 258 004 10/84 (series) | P532 258 004 10/84 (parallel) | P532 258 0.7 10/84 (parallel) | |
|---|---|---|---|---|---|---|
| 1 | Resistance per Phase, typ | 27.0 | 8.8 | 2.2 | 0.4 | Ohms |
| 2 | Inductance per Phase, typ | 64.0 | 20.0 | 5.0 | 0.7 | mH |
| 3 | Nominal Phase Current (2 ph. On) | 0.40 | 0.70 | 1.40 | 3.70 | A |
| 4 | Nominal Phase Current (1 ph. On) | 0.56 | 1.00 | 2.00 | 5.20 | A |
| 5 | Back EMF Amplitude | 21.00 | 12.00 | 6.00 | 2.30 | V/kstep/s |
| **Coil independent parameters** | | | | | | |
| 6 | Holding Torque, nominal current | | 205 (29) | | | mNm (oz-in) |
| 7 | Holding Torque, 1.5x nominal current (1) | | 300 (42.5) | | | mNm (oz-in) |
| 8 | Detent Torque | | 40 (5.67) | | | mNm (oz-in) |
| 9 | Rotor Inertia | | 12.000 | | | $kgm^2 \times 10^{-7}$ |
| 10 | Step Angle | 4 | 3.6 | 3.6 | 3.6 | Degree |
| 11 | Absolute Accuracy 2 ph. On, Full step mode | | +/- 5% | | | % Full Step |
| 12 | Steps Per Revolution | | 100 | | | |
| 13 | Ambient Temperature Range (operating) | | -20 to 50 (-4 to 122) | | | ℃ (℉) |
| 14 | Maximum Coil Temperature | | 130 (266) | | | ℃ (℉) |
| 15 | Thermal Resistance Coil-ambient (2) | 7 | 7.3 | 7.3 | 7.3 | ℃/W |
| 16 | Natural Resonance Frequency (nominal current) | | 330 | | | Hz |
| 17 | Electrical Time Constant | | 2.30 | | | ms |
| 18 | Angular Acceleration (nominal current) | | 195,000 | | | $rad/s^2$ |
| 19 | Bearing Type | | Ball | | | |
| 20 | Dielectric Withstanding Voltage | | 500 VRMS for 5 seconds (25@5N) | | | VAC |
| 21 | Radial Shaft Play | | 25@5N | | | µm |
| 22 | Axial Shaft Play | | 25@5N | | | µm |
| 23 | Maximum Radial Shaft Load | | 20 (72) | | | N (oz) |
| 24 | Maximum Axial Shaft Load (3) | | 30 (108) | | | N (oz) |
| 25 | Weight | | 250 (8.8) | | | g (oz) |
| 26 | Power Rate (nominal current) | | 35.0 | | | kW/s |

(1) Measured with 1 phase ON. The max coil temperature must be respected

(2) Motor unmounted

(3) Shaft must be supported when press-fitting a pulley or pinion


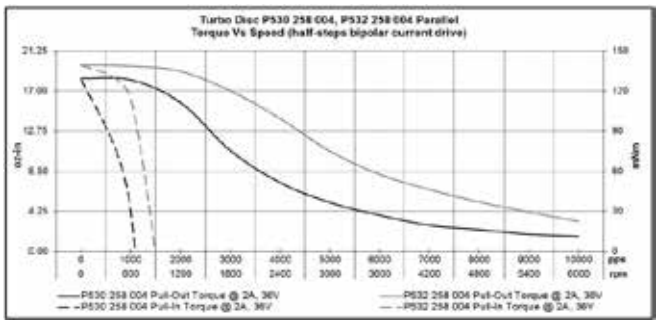


V121616

## P532 With Encoder

Ø52mm

205 mNm

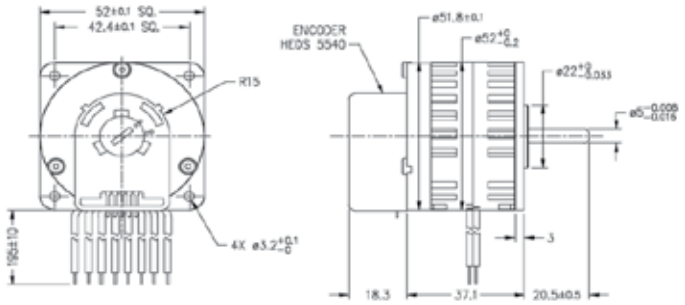


Dimensions in mm

### P532EN

| Electrical Data | | P532 012 137 HEDS 5540 A14 (series) | P532 004 137 HEDS 5540 A14 (series) | P532 004 137 HEDS 5540 A14 (parallel) | P532 0.7 137 HEDS 5540 A14 (parallel) | |
|---|---|---|---|---|---|---|
| 1 | Resistance per Phase, typ | 27.0 | 8.8 | 2.2 | 0.4 | Ohms |
| 2 | Inductance per Phase, typ | 64.0 | 20.0 | 5.0 | 0.7 | mH |
| 3 | Nominal Phase Current (2 ph. On) | 0.40 | 0.70 | 1.40 | 3.70 | A |
| 4 | Nominal Phase Current (1 ph. On) | 0.56 | 1.00 | 2.00 | 5.20 | A |
| 5 | Back EMF Amplitude | 21.00 | 12.00 | 6.00 | 2.30 | V/kstep/s |
| **Coil independent parameters** | | | | | | |
| 6 | Holding Torque, nominal current | | 205 (29) | | | mNm (oz-in) |
| 7 | Holding Torque, 1.5x nominal current (1) | | 300 (42.5) | | | mNm (oz-in) |
| 8 | Detent Torque | | 45 (6.4) | | | mNm (oz-in) |
| 9 | Rotor Inertia | | 13.000 | | | $kgm^2 \times 10^{-7}$ |
| 10 | Step Angle | 4 | 3.6 | 3.6 | 3.6 | Degree |
| 11 | Absolute Accuracy 2 ph. On, Full step mode | | +/- 5% | | | % Full Step |
| 12 | Steps Per Revolution | | 100 | | | |
| 13 | Ambient Temperature Range (operating) | | -20 to 50 (-4 to 122) | | | ℃ (℉) |
| 14 | Maximum Coil Temperature | | 130 (266) | | | ℃ (℉) |
| 15 | Thermal Resistance Coil-ambient (2) | 7 | 7.3 | 7.3 | 7.3 | ℃/W |
| 16 | Natural Resonance Frequency (nominal current) | | 350 | | | Hz |
| 17 | Electrical Time Constant | | 1.50 | | | ms |
| 18 | Angular Acceleration (nominal current) | | 171,000 | | | $rad/s^2$ |
| 19 | Bearing Type | | Ball | | | |
| 20 | Dielectric Withstanding Voltage | | 500 VRMS for 5 seconds (25@5N) | | | VAC |
| 21 | Radial Shaft Play | | 25@5N | | | µm |
| 22 | Axial Shaft Play | | 25@5N | | | µm |
| 23 | Maximum Radial Shaft Load | | 20 (72) | | | N (oz) |
| 24 | Maximum Axial Shaft Load (3) | | 30 (108) | | | N (oz) |
| 25 | Weight | | 260 (9.2) | | | g (oz) |
| 26 | Power Rate (nominal current) | | 35.0 | | | kW/s |

(1) Measured with 1 phase ON. The max coil temperature must be respected

(2) Motor unmounted

(3) Shaft must be supported when press-fitting a pulley

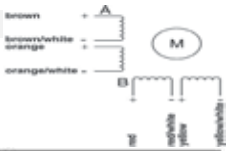


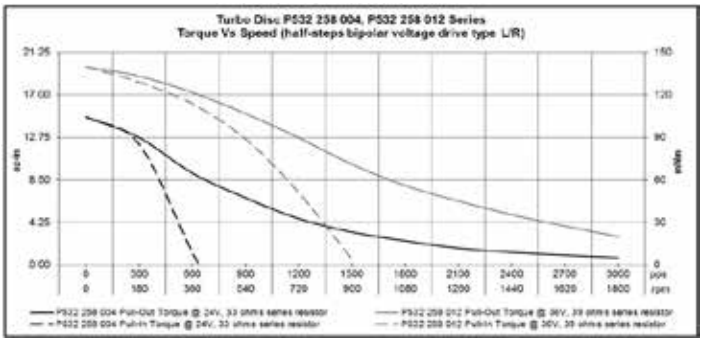


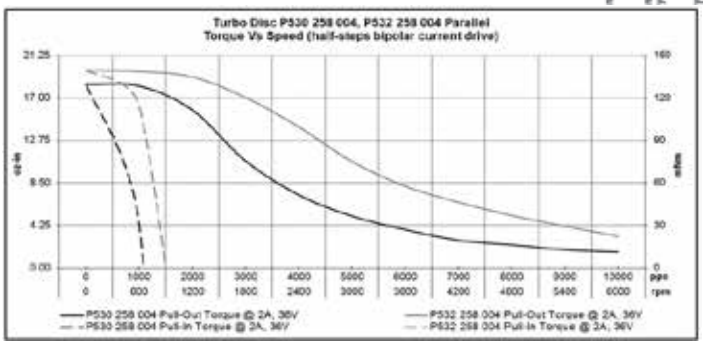


V121616

## P760 With Encoder

Ø74mm 325 mNm

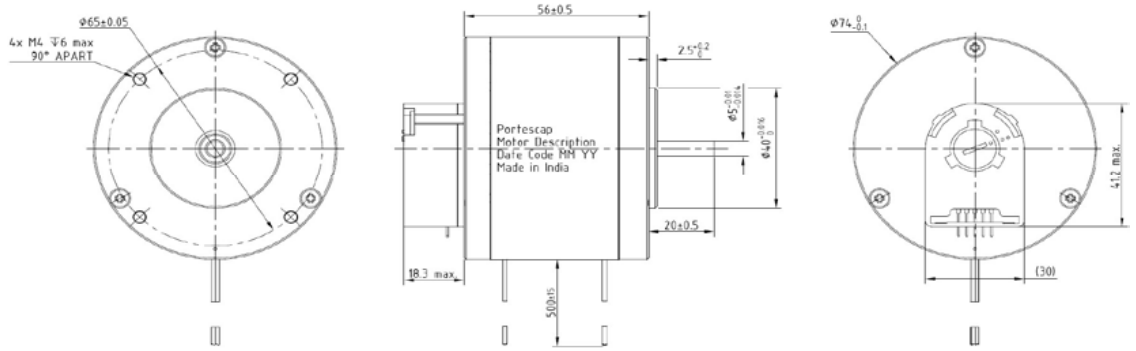


Dimensions in mm

### P760 With Encoder

| Electrical Data | | P760 0.4 05 HEDS 5540 A11 | |
|---|---|---|---|
| 1 | Resistance per Phase, typ | 0.4 | Ohms |
| 2 | Inductance per Phase, typ | 2.1 | mH |
| 3 | Nominal Phase Current (2 ph. On) | 4.30 | A |
| 4 | Nominal Phase Current (1 ph. On) | 6.00 | A |
| 5 | Back EMF Amplitude | 7.10 | V/kstep/s |
| **Coil independent parameters** | | | |
| 6 | Holding Torque, nominal current | 325 (46) | mNm (oz-in) |
| 7 | Holding Torque, 1.5x nominal current (1) | 485 (68.7) | mNm (oz-in) |
| 8 | Detent Torque | 20 (2.8) | mNm (oz-in) |
| 9 | Rotor Inertia | 17.0 | $kgm^2 \times 10^{-7}$ |
| 10 | Step Angle | 7.5 | Degree |
| 11 | Absolute Accuracy 2 ph. On, Full step mode | +/- 5% | % Full Step |
| 12 | Steps Per Revolution | 48 | |
| 13 | Ambient Temperature Range (operating) | -20 to 50 (-4 to 122) | ℃ (℉) |
| 14 | Maximum Coil Temperature | 130 (266) | ℃ (℉) |
| 15 | Thermal Resistance Coil-ambient (2) | 5 | ℃/W |
| 16 | Natural Resonance Frequency (nominal current) | 240 | Hz |
| 17 | Electrical Time Constant | 4.70 | ms |
| 18 | Angular Acceleration (nominal current) | 190,000 | $rad/s^2$ |
| 19 | Bearing Type | Ball | |
| 20 | Dielectric Withstanding Voltage | 500 VRMS for 5 seconds | VAC |
| 21 | Radial Shaft Play | 25@5N | µm |
| 22 | Axial Shaft Play | 25@5N | µm |
| 23 | Maximum Radial Shaft Load | 20 (72) | N (oz) |
| 24 | Maximum Axial Shaft Load (3) | 30 (108) | N (oz) |
| 25 | Weight | 700 (25) | g (oz) |
| 26 | Power Rate (nominal current) | 58.0 | kW/s |

(1) Measured with 1 phase ON. The max coil temperature must be respected

(2) Motor unmounted

(3) Shaft must be supported when press-fitting a pulley or pinion

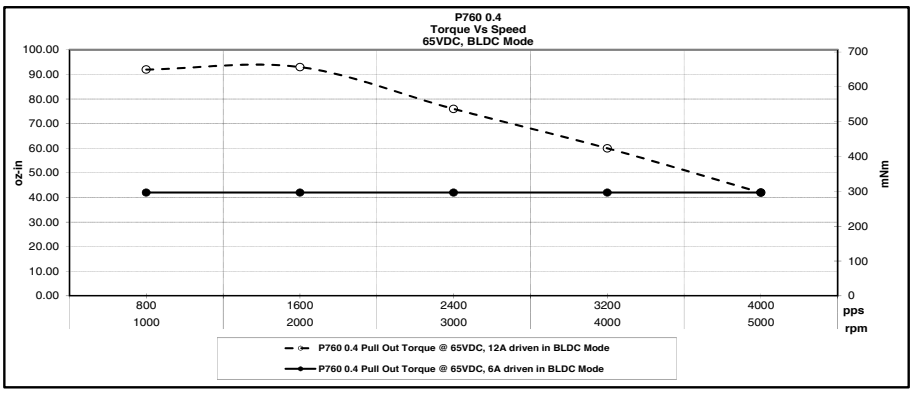


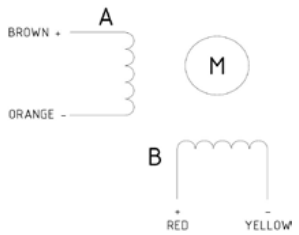


V121616

# Can Stack Motors

These stepper motors eliminate the need for closed-loop feedback, providing accurate positioning in steps that typically range from 3.6 to 18 degrees (100 to 20 steps per revolution). Our can stack motors are the simplest motion solution for a wide range of applications that require high continuous motor torque but don't require the absolute positioning of a servo system.

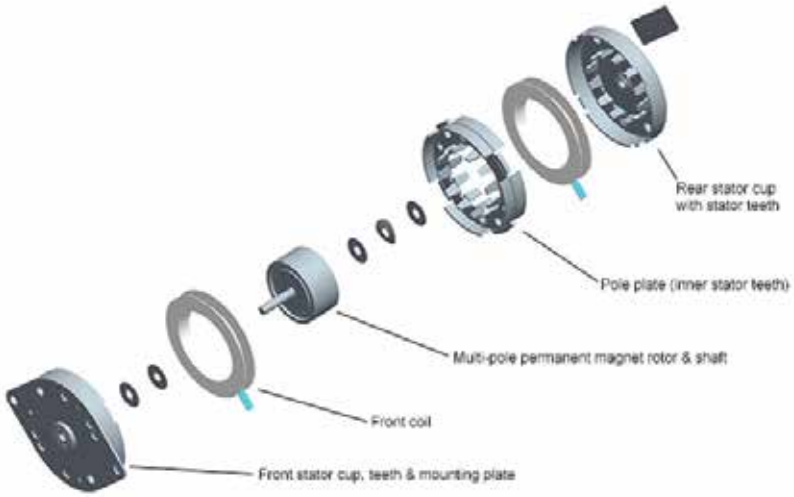


## Simple, Cost-Effective, Accurate Positioning

| Feature | Details | Application Advantages |
|---|---|---|
| **Stepper motor design** | • No need for encoder feedback | • Simple open-loop positioning that can be digitally controlled |
| **Step angle variation: 3.6° to 18°** | • Designed to accommodate coarse to fine mechanical resolution | • Flexibility to meet most application positioning requirements |
| **Simple construction** | • Basic mechanical design with proven performance<br>• No brushes to replace | • Compact, reliable, cost-effective motion control |
| **Radially magnetized permanent magnet rotor** | • High torque-to-size ratio | • Design flexibility<br>• Overall reduction in machine size |
| **Bobbin wound coil design** | • Unpiolar/bipolar windings designed for optimum performance | • Exceptionally efficient motor output for power input |
| **Sintered bronze bearing design, Ball bearings optional** | • Long bearing and lubrication life<br>• Choice of bearing performance characteristics | • Increased service life and reliability for any application |

## A Classic Design with Wide-Ranging Application

**Medical devices & clinical diagnostics**
- Laboratory automation
- Infusion systems
- Diagnostic analyzers
- Miniature pumps
- Pipettes

**Instrumentation**
- Dosing & dispensing systems
- Gas detection
- Land surveying
- Microscopes

**Security**
- Access systems
- Camera positioning

**Other**
- Damper actuation
- Valve actuation

## Meet your Application's Working Point Requirements

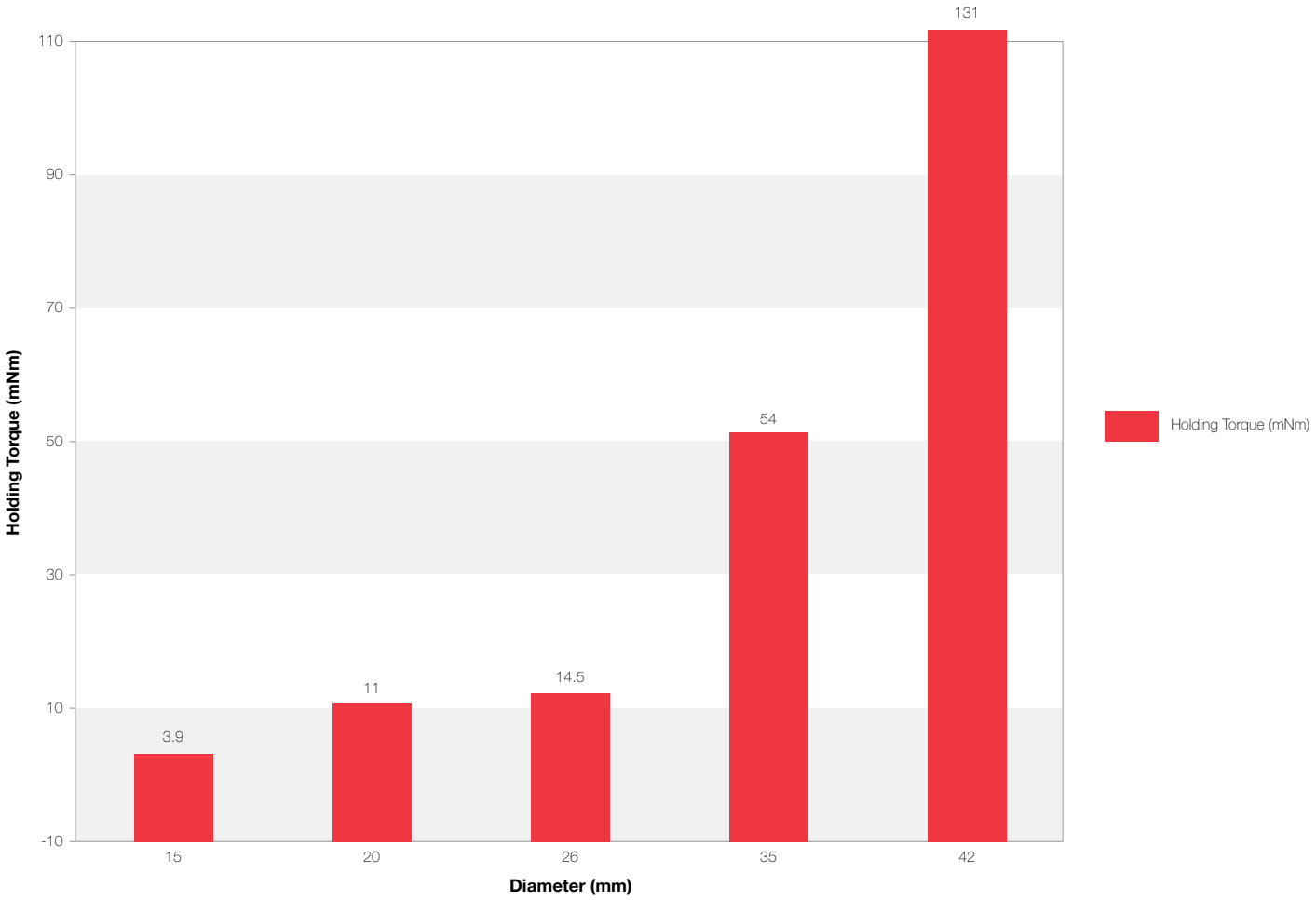


For complete product and application details, visit **portescap.com/can-stack**

## 15M020D

RoHS Compliant | Ø15mm | 3.87 mNm

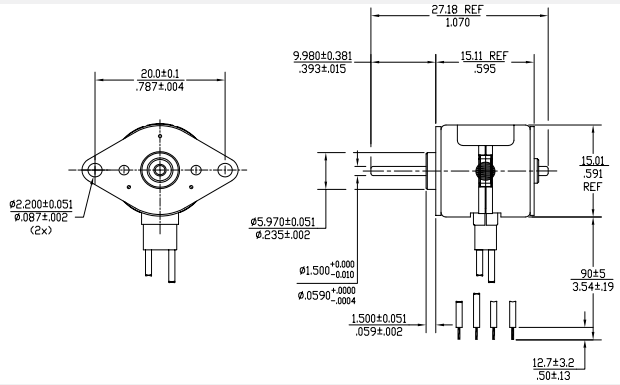


Dimensions in mm

### 15M020D

| Electrical Data | | 15M020D1B Bipolar | |
|---|---|---|---|
| 1 | Operating Voltage | 5 | VDC |
| 2 | Resistance per Phase, ± 10% | 40.0 | Ohms |
| 3 | Inductance per Phase, typ | 14.0 | mH |
| 4 | Rated Current per Phase * | 0.13 | A |
| **Coil independent parameters** | | | |
| 5 | Holding Torque, MIN * | 3.87 (0.55) | mNm (oz-in) |
| 6 | Detent Torque, Max | 1.62 (0.23) | mNm (oz-in) |
| 7 | Rotor Inertia | 0.115 (0.00063) | $gcm^2$ ($oz\text{-}in\text{-}s^2$) |
| 8 | Step Angle | 18.0 | Degree |
| 9 | Absolute accuracy 2 ph. On, Full step | ± 1.5 | Degree |
| 10 | Steps per Revolution | 20 | |
| 11 | Ambient Temp Range (operating) | -20 to +70 (-4 to +158) | °C (°F) |
| 12 | Maximum Coil Temperature | 130 (266) | °C (°F) |
| 13 | Bearing Type | Sintered Bronze Sleeve | |
| 14 | Insulation Resistance at 500 VDC | 100 | Mohms |
| 15 | Dielectric Withstanding Voltage | 450 VRMS for 2 Seconds | VAC |
| 16 | Weight | 14 (0.5) | g (oz) |
| 17 | Leadwire | AWG #28, UL1429 (80° C, 150 V) | |
| All Motor Data Values at 20°C Unless Otherwise Specified | | | |

* Energize at Rated Current, 2 Phase On

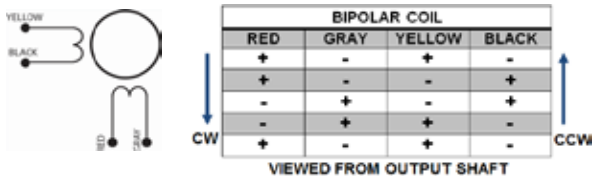


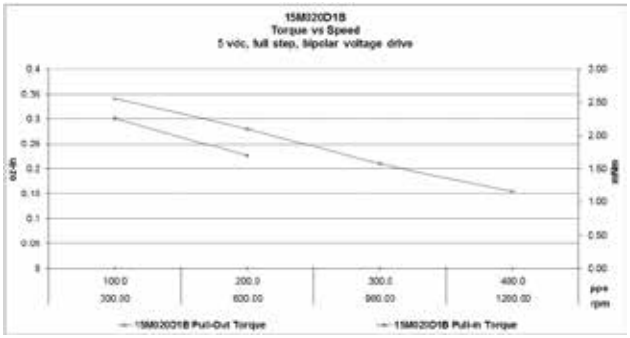


V121616

## 20M024D

RoHS Compliant

Ø20mm

11 mNm

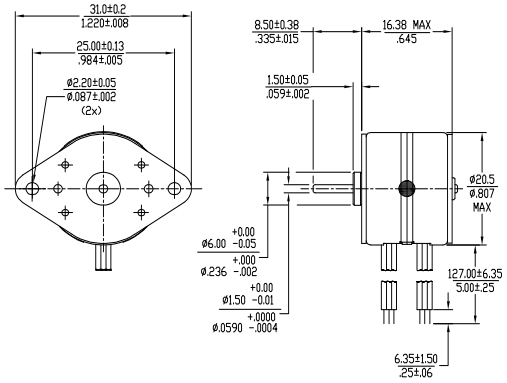


Dimensions in mm

### 20M024D

| Electrical Data | | 20M024D1U Unipolar | 20M024D2U Unipolar | 20M024D1B Bipolar | 20M024D2B Bipolar | |
|---|---|---|---|---|---|---|
| 1 | Operating Voltage | 5 | 12 | 5 | 12 | VDC |
| 2 | Resistance per Phase, ± 10% | 20.0 | 115.2 | 20.0 | 115.2 | Ohms |
| 3 | Inductance per Phase, typ | 3.9 | 20.3 | 7.8 | 52.8 | mH |
| 4 | Rated Current per Phase * | 0.25 | 0.10 | 0.25 | 0.10 | A |
| **Coil independent parameters** | | | | | | |
| 5 | Holding Torque, MIN * | 7.8(1.1) | 7.8(1.1) | 11(1.56) | 11(1.56) | mNm (oz-in) |
| 6 | Detent Torque, Max | 3.87 (0.55) | | | | mNm (oz-in) |
| 7 | Rotor Inertia | 0.41 (0.00225) | | | | $gcm^2$ (oz-in-$s^2$) |
| 8 | Step Angle | 15.0 | | | | Degree |
| 9 | Absolute accuracy 2 ph. On, Full step | ±1 | | | | Degree |
| 10 | Steps per Revolution | 24 | | | | |
| 11 | Ambient Temp Range (operating) | -20 TO 70 (-4 TO 158) | | | | ℃ (℉) |
| 12 | Maximum Coil Temperature | 130 (266) | | | | ℃ (℉) |
| 13 | Bearing Type | Sintered Bronze Sleeve | | | | |
| 14 | Insulation Resistance at 500 VDC | 100 | | | | Mohms |
| 15 | Dielectric Withstanding Voltage | 450 VRMS for 2 seconds | | | | VAC |
| 16 | Weight | 23.5 (0.83) | | | | g (oz) |
| 17 | Leadwire | AWG #28, UL1429 (80° C, 150 V) | | | | |
| All Motor Data Values at 20℃ Unless Otherwise Specified | | | | | | |

* Energize at Rated Current, 2 Phase On

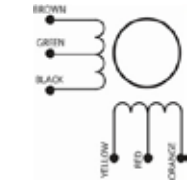


UNIPOLAR COIL

| YELLOW | ORANGE | BROWN | BLACK | RED/GREEN |
|---|---|---|---|---|
| + | - | + | - | + |
| + | - | - | + | + |
| - | + | - | + | + |
| - | + | + | - | + |
| + | - | + | - | + |

CW ↓ ↑ CCW

VIEWED FROM OUTPUT SHAFT


BIPOLAR COIL

| RED | GRAY | YELLOW | BLACK |
|---|---|---|---|
| + | - | + | - |
| + | - | - | + |
| - | + | - | + |
| - | + | + | - |
| + | - | + | - |

CW ↓ ↑ CCW

VIEWED FROM OUTPUT SHAFT

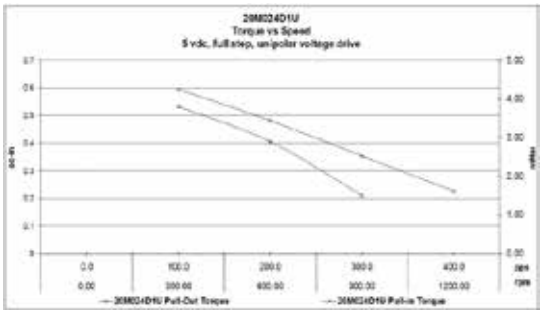


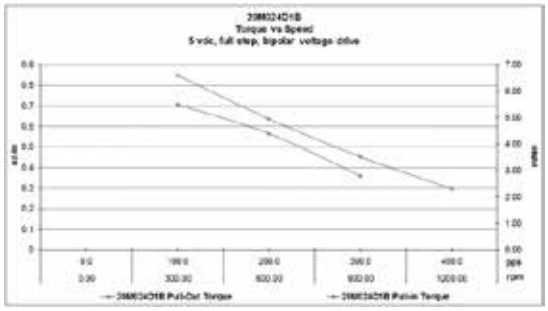


V121616

## 26M024B

RoHS Compliant

Ø26mm 7.8 mNm

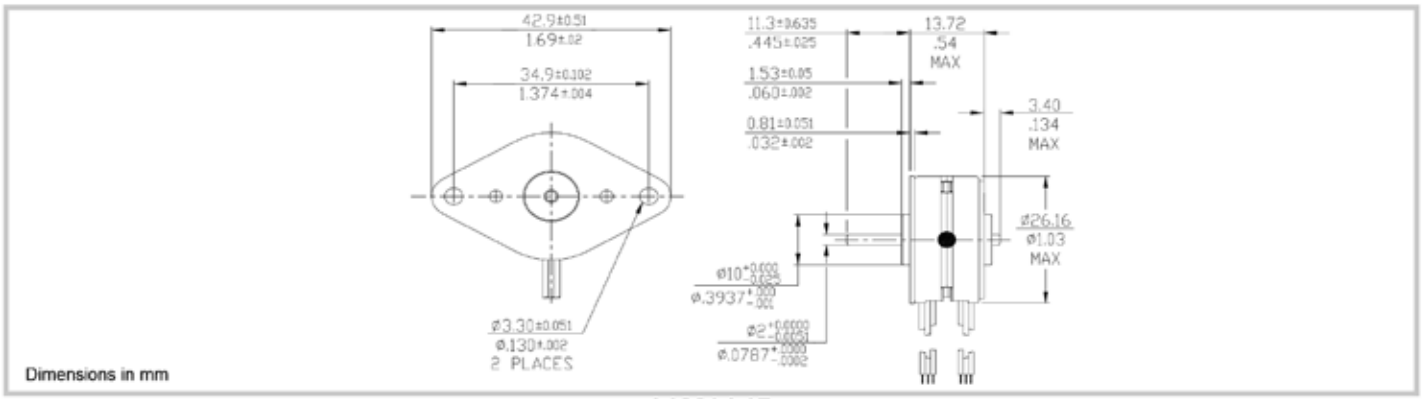


### 26M024B

| Electrical Data | | 26M024B1U Unipolar | 26M024B2U Unipolar | 26M024B1B Bipolar | 26M024B2B Bipolar | |
|---|---|---|---|---|---|---|
| 1 | Operating Voltage | 5 | 12 | 5 | 12 | VDC |
| 2 | Resistance per Phase, ± 10% | 19.6 | 110.0 | 19.8 | 108.0 | Ohms |
| 3 | Inductance per Phase, typ | 4.1 | 29.9 | 7.7 | 52.4 | mH |
| 4 | Rated Current per Phase * | 0.26 | 0.11 | 0.25 | 0.11 | A |
| **Coil independent parameters** | | | | | | |
| 5 | Holding Torque, MIN * | 6.3 (0.9) | 6.3 (0.9) | 7.8 (1.1) | 7.8 (1.1) | mNm (oz-in) |
| 6 | Detent Torque, Max | 1.34 (0.19) | | | | mNm (oz-in) |
| 7 | Rotor Inertia | 1.1 (0.00601) | | | | $gcm^2$ (oz-in-$s^2$) |
| 8 | Step Angle | 15.0 | | | | Degree |
| 9 | Absolute accuracy 2 ph. On, Full step | ± 1 | | | | Degree |
| 10 | Steps per Revolution | 24 | | | | |
| 11 | Ambient Temp Range (operating) | -20 to +70 (-4 to +158) | | | | °C (°F) |
| 12 | Maximum Coil Temperature | 130 (266) | | | | °C (°F) |
| 13 | Bearing Type | Sintered Bronze Sleeve | | | | |
| 14 | Insulation Resistance at 500 VDC | 100 | | | | Mohms |
| 15 | Dielectric Withstanding Voltage | 650 for 2 seconds | | | | VAC |
| 16 | Weight | 34 (1.2) | | | | g (oz) |
| 17 | Leadwire | AWG #28, UL1429 (80° C, 150 V) | | | | |

All Motor Data Values at 20°C Unless Otherwise Specified

* Energize at Rated Current, 2 Phase On

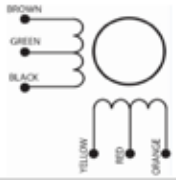


UNIPOLAR COIL

| YELLOW | ORANGE | BROWN | BLACK | RED/GREEN |
|---|---|---|---|---|
| + | - | + | - | + |
| + | - | - | + | + |
| - | + | - | + | + |
| - | + | + | - | + |
| + | - | + | - | + |

CW ↓ ↑ CC

VIEWED FROM OUTPUT SHAFT

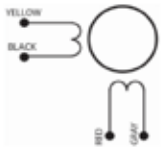


BIPOLAR COIL

| RED | GRAY | YELLOW | BLACK |
|---|---|---|---|
| + | - | + | - |
| + | - | - | + |
| - | + | - | + |
| - | + | + | - |
| + | - | + | - |

CW ↓ ↑ CCW

VIEWED FROM OUTPUT SHAFT

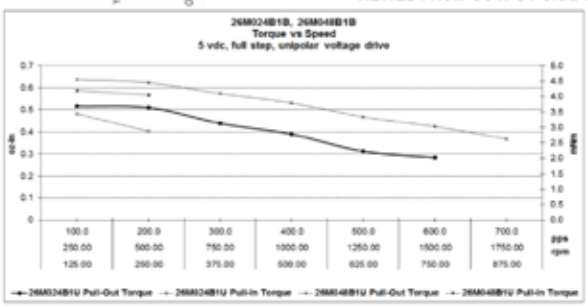


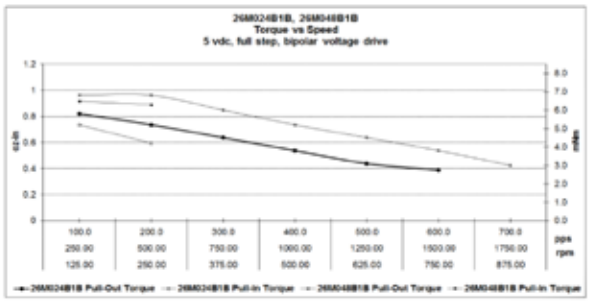


V121616

# 26M024D

RoHS Compliant

Ø26mm

12 mNm

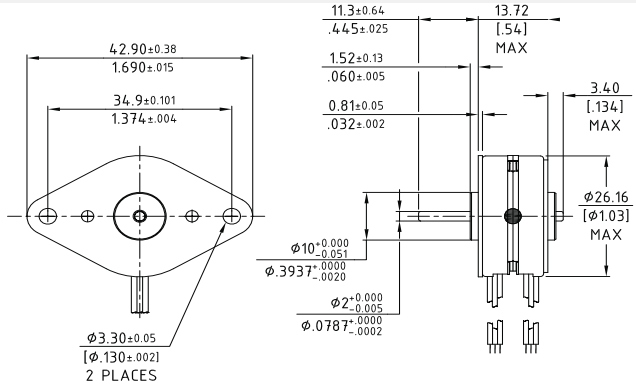


Dimensions in mm

## 26M024D

| Electrical Data | | 26M024D1U Unipolar | 26M024D2U Unipolar | 26M024D1B Bipolar | 26M024D2B Bipolar | |
|---|---|---|---|---|---|---|
| 1 | Operating Voltage | 5 | 12 | 5 | 12 | VDC |
| 2 | Resistance per Phase, ± 10% | 19.6 | 110.0 | 19.8 | 108.0 | Ohms |
| 3 | Inductance per Phase, typ | 3.8 | 26.6 | 9.0 | 44.3 | mH |
| 4 | Rated Current per Phase * | 0.26 | 0.11 | 0.25 | 0.11 | A |
| **Coil independent parameters** | | | | | | |
| 5 | Holding Torque, MIN * | 9.5 (1.35) | 9.5 (1.35) | 12 (1.7) | 12 (1.7) | mNm (oz-in) |
| 6 | Detent Torque, Max | 4.2 (0.6) | | | | mNm (oz-in) |
| 7 | Rotor Inertia | 1.1 (0.00601) | | | | $gcm^2$ (oz-in-$s^2$) |
| 8 | Step Angle | 15.0 | | | | Degree |
| 9 | Absolute accuracy 2 ph. On, Full step | ± 1 | | | | Degree |
| 10 | Steps per Revolution | 24.0 | | | | |
| 11 | Ambient Temp Range (operating) | -20 to +70 (-4 to +158) | | | | °C (°F) |
| 12 | Maximum Coil Temperature | 130 (266) | | | | °C (°F) |
| 13 | Bearing Type | Sintered Bronze Sleeve | | | | |
| 14 | Insulation Resistance at 500 VDC | 100.0 | | | | Mohms |
| 15 | Dielectric Withstanding Voltage | 650 for 2 seconds | | | | VAC |
| 16 | Weight | 34 (1.2) | | | | g (oz) |
| 17 | Leadwire | AWG #28, UL1429 (80° C, 150 V) | | | | |
| All Motor Data Values at 20°C Unless Otherwise Specified | | | | | | |

* Energize at Rated Current, 2 Phase On

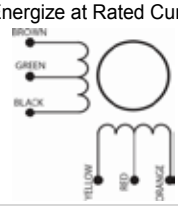


UNIPOLAR COIL

| YELLOW | ORANGE | BROWN | BLACK | RED/GREEN |
|---|---|---|---|---|
| + | - | + | - | + |
| + | - | - | + | + |
| - | + | - | + | + |
| - | + | + | - | + |
| + | - | + | - | + |

CW ↓ ↑ CC

VIEWED FROM OUTPUT SHAFT

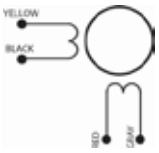


BIPOLAR COIL

| RED | GRAY | YELLOW | BLACK |
|---|---|---|---|
| + | - | + | - |
| + | - | - | + |
| - | + | - | + |
| - | + | + | - |
| + | - | + | - |

CW ↓ ↑ CCW

VIEWED FROM OUTPUT SHAFT

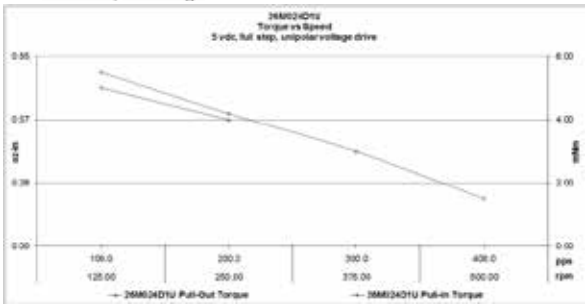


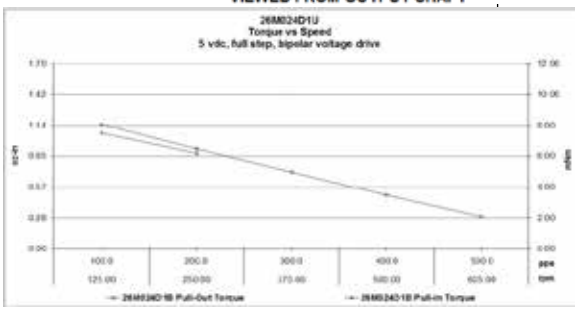


V121616

## 26M048B

RoHS Compliant

Ø26mm 10.6 mNm

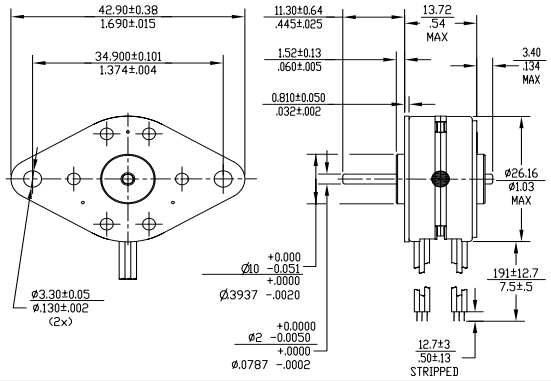


Dimensions in mm

## 26M048B

| Electrical Data | | 26M048B1U Unipolar | 26M048B2U Unipolar | 26M048B1B Bipolar | 26M048B2B Bipolar | |
|---|---|---|---|---|---|---|
| 1 | Operating Voltage | 5 | 12 | 5 | 12 | VDC |
| 2 | Resistance per Phase, ± 10% | 19.6 | 110.0 | 19.8 | 108.0 | Ohms |
| 3 | Inductance per Phase, typ | 5.3 | 36.5 | 13.0 | 60.7 | mH |
| 4 | Rated Current per Phase * | 0.26 | 0.11 | 0.25 | 0.11 | A |
| **Coil independent parameters** | | | | | | |
| 5 | Holding Torque, MIN * | 9.2 (1.3) | 9.2 (1.3) | 10.6 (1.5) | 10.6 (1.5) | mNm (oz-in) |
| 6 | Detent Torque, Max | 0.85 (0.12) | | | | mNm (oz-in) |
| 7 | Rotor Inertia | 1.1 (0.00601) | | | | $gcm^2$ (oz-in-$s^2$) |
| 8 | Step Angle | 7.5 | | | | Degree |
| 9 | Absolute accuracy 2 ph. On, Full step | ± .5 | | | | Degree |
| 10 | Steps per Revolution | 48.0 | | | | |
| 11 | Ambient Temp Range (operating) | -20 to +70 (-4 to +158) | | | | °C (°F) |
| 12 | Maximum Coil Temperature | 130 (266) | | | | °C (°F) |
| 13 | Bearing Type | Sintered Bronze Sleeve | | | | |
| 14 | Insulation Resistance at 500 VDC | 100.0 | | | | Mohms |
| 15 | Dielectric Withstanding Voltage | 650 for 2 seconds | | | | VAC |
| 16 | Weight | 34 (1.2) | | | | g (oz) |
| 17 | Leadwire | AWG #28, UL1429 (80° C, 150 V) | | | | |
| All Motor Data Values at 20°C Unless Otherwise Specified | | | | | | |

* Energize at Rated Current, 2 Phase On

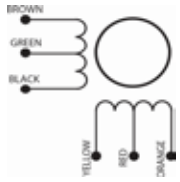


UNIPOLAR COIL

| YELLOW | ORANGE | BROWN | BLACK | RED/GREEN |
|---|---|---|---|---|
| + | - | + | - | + |
| + | - | - | + | + |
| - | + | - | + | + |
| - | + | + | - | + |
| + | - | + | - | + |

CW ↓ ↑ CCW

VIEWED FROM OUTPUT SHAFT

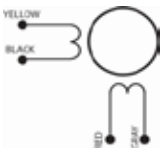


BIPOLAR COIL

| RED | GRAY | YELLOW | BLACK |
|---|---|---|---|
| + | - | + | - |
| + | - | - | + |
| - | + | - | + |
| - | + | + | - |
| + | - | + | - |

CW ↓ ↑ CCW

VIEWED FROM OUTPUT SHAFT

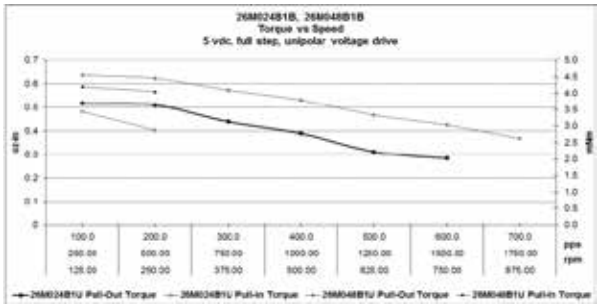


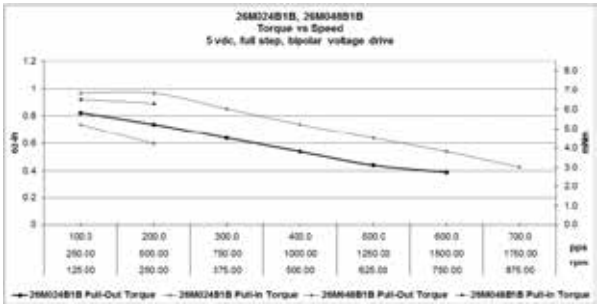


V121616

## 26M048D

RoHS Compliant

Ø26mm 14.5 mNm

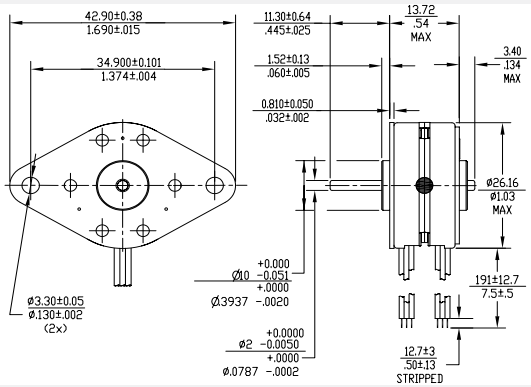


Dimensions in mm

### 26M048D

| Electrical Data | | 26M048D1U Unipolar | 26M048D2U Unipolar | 26M048D1B Bipolar | 26M048D2B Bipolar | |
|---|---|---|---|---|---|---|
| 1 | Operating Voltage | 5 | 12 | 5 | 12 | VDC |
| 2 | Resistance per Phase, ± 10% | 19.6 | 110.0 | 19.8 | 108.0 | Ohms |
| 3 | Inductance per Phase, typ | 4.9 | 33.0 | 12.0 | 55.0 | mH |
| 4 | Rated Current per Phase * | 0.26 | 0.11 | 0.25 | 0.11 | A |
| **Coil independent parameters** | | | | | | |
| 5 | Holding Torque, MIN * | 11.5 (1.63) | 11.5 (1.63) | 14.5 (2.05) | 14.5 (2.05) | mNm (oz-in) |
| 6 | Detent Torque, Max | 4.2 (0.6) | | | | mNm (oz-in) |
| 7 | Rotor Inertia | 1.1 (0.00601) | | | | $gcm^2$ (oz-in-$s^2$) |
| 8 | Step Angle | 7.5 | | | | Degree |
| 9 | Absolute accuracy 2 ph. On, Full step | ± .5 | | | | Degree |
| 10 | Steps per Revolution | 48.0 | | | | |
| 11 | Ambient Temp Range (operating) | -20 to +70 (-4 to +158) | | | | °C (°F) |
| 12 | Maximum Coil Temperature | 130 (266) | | | | °C (°F) |
| 13 | Bearing Type | Sintered Bronze Sleeve | | | | |
| 14 | Insulation Resistance at 500 VDC | 100.0 | | | | Mohms |
| 15 | Dielectric Withstanding Voltage | 650 for 2 seconds | | | | VAC |
| 16 | Weight | 34 (1.2) | | | | g (oz) |
| 17 | Leadwire | AWG #28, UL1429 (80° C, 150 V) | | | | |
| All Motor Data Values at 20°C Unless Otherwise Specified | | | | | | |

* Energize at Rated Current, 2 Phase On

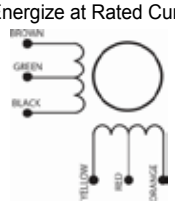


UNIPOLAR COIL

| YELLOW | ORANGE | BROWN | BLACK | RED/GREEN |
|---|---|---|---|---|
| + | - | + | - | + |
| + | - | - | + | + |
| - | + | - | + | + |
| - | + | + | - | + |
| + | - | + | - | + |

CW ↓ ↑ CC

VIEWED FROM OUTPUT SHAFT

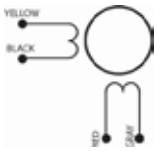


BIPOLAR COIL

| RED | GRAY | YELLOW | BLACK |
|---|---|---|---|
| + | - | + | - |
| + | - | - | + |
| - | + | - | + |
| - | + | + | - |
| + | - | + | - |

CW ↓ ↑ CCW

VIEWED FROM OUTPUT SHAFT

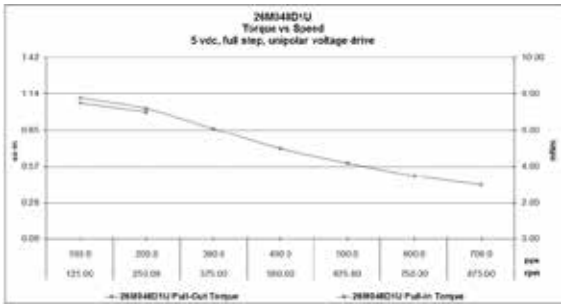


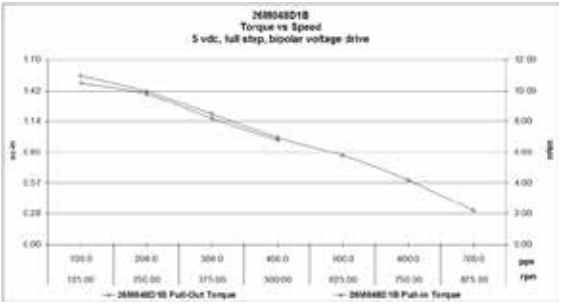


V121616

## 35L024B RoHS Compliant Ø35mm 25 mNm

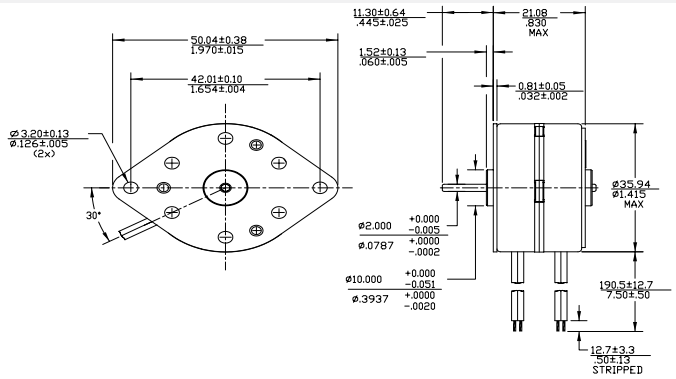


Dimensions in mm

### 35L024B

| Electrical Data | | 35L024B1U Unipolar | 35L024B2U Unipolar | 35L024B1B Bipolar | 35L024B2B Bipolar | |
|---|---|---|---|---|---|---|
| 1 | Operating Voltage | 5 | 12 | 5 | 12 | VDC |
| 2 | Resistance per Phase, ± 10% | 11.0 | 64.0 | 11.0 | 64.0 | Ohms |
| 3 | Inductance per Phase, typ | 7.4 | 38.0 | 14.2 | 65.0 | mH |
| 4 | Rated Current per Phase * | 0.45 | 0.19 | 0.45 | 0.19 | A |
| **Coil independent parameters** | | | | | | |
| 5 | Holding Torque, MIN * | 20 (2.8) | 20 (2.8) | 25 (3.5) | 25 (3.5) | mNm (oz-in) |
| 6 | Detent Torque, Max | 4.2 (0.6) | | | | mNm (oz-in) |
| 7 | Rotor Inertia | 4 (0.021) | | | | $gcm^2$ (oz-in-$s^2$) |
| 8 | Step Angle | 15.0 | | | | Degree |
| 9 | Absolute accuracy 2 ph. On, Full step | ± 1 | | | | Degree |
| 10 | Steps per Revolution | 24.0 | | | | |
| 11 | Ambient Temp Range (operating) | -20 to +70 (-4 to +158) | | | | °C (°F) |
| 12 | Maximum Coil Temperature | 130 (266) | | | | °C (°F) |
| 13 | Bearing Type | Sintered Bronze Sleeve | | | | |
| 14 | Insulation Resistance at 500 VDC | 100.0 | | | | Mohms |
| 15 | Dielectric Withstanding Voltage | 650 for 2 seconds | | | | VAC |
| 16 | Weight | 88 (3.1) | | | | g (oz) |
| 17 | Leadwire | AWG #26, UL 1430 (105°C, 300V) | | | | |
| All Motor Data Values at 20°C Unless Otherwise Specified | | | | | | |

* Energize at Rated Current, 2 Phase On

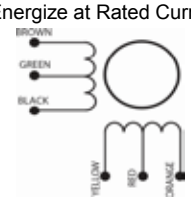


UNIPOLAR COIL

| YELLOW | ORANGE | BROWN | BLACK | RED/GREEN |
|---|---|---|---|---|
| + | - | + | - | + |
| + | - | - | + | + |
| - | + | - | + | + |
| - | + | + | - | + |
| + | - | + | - | + |

CW ↓ ↑ CCW

VIEWED FROM OUTPUT SHAFT

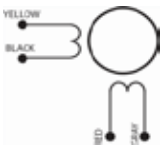


BIPOLAR COIL

| RED | GRAY | YELLOW | BLACK |
|---|---|---|---|
| + | - | + | - |
| + | - | - | + |
| - | + | - | + |
| - | + | + | - |
| + | - | + | - |

CW ↓ ↑ CCW

VIEWED FROM OUTPUT SHAFT

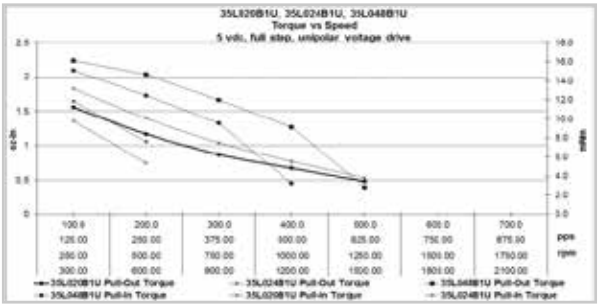


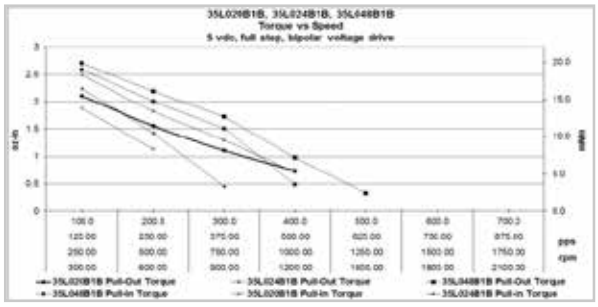


V121616

# 35L048B

RoHS Compliant

Ø35mm

28 mNm

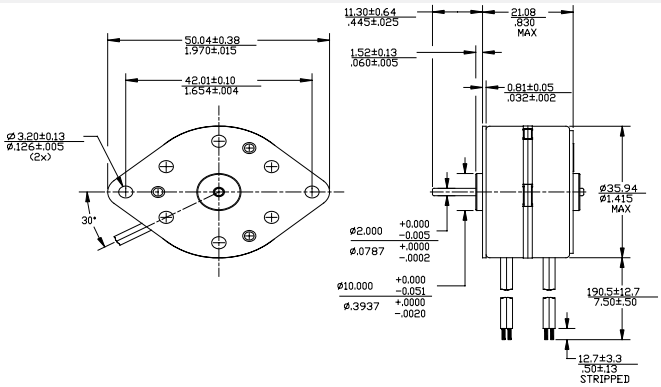


Dimensions in mm

## 35L048B

| Electrical Data | | 35L048B1U Unipolar | 35L048B2U Unipolar | 35L048B1B Bipolar | 35L048B2B Bipolar | |
|---|---|---|---|---|---|---|
| 1 | Operating Voltage | 5 | 12 | 5 | 12 | VDC |
| 2 | Resistance per Phase, ± 10% | 11.0 | 64.0 | 11.0 | 64.0 | Ohms |
| 3 | Inductance per Phase, typ | 7.8 | 40.0 | 15.0 | 72.0 | mH |
| 4 | Rated Current per Phase * | 0.45 | 0.19 | 0.45 | 0.19 | A |
| **Coil independent parameters** | | | | | | |
| 5 | Holding Torque, MIN * | 25 (3.5) | 25 (3.5) | 28 (4) | 28 (4) | mNm (oz-in) |
| 6 | Detent Torque, Max | 4.2 (0.6) | | | | mNm (oz-in) |
| 7 | Rotor Inertia | 4 (0.021) | | | | $gcm^2$ ($oz\text{-}in\text{-}s^2$) |
| 8 | Step Angle | 7.5 | | | | Degree |
| 9 | Absolute accuracy 2 ph. On, Full step | ± .5 | | | | Degree |
| 10 | Steps per Revolution | 48.0 | | | | |
| 11 | Ambient Temp Range (operating) | -20 to +70 (-4 to +158) | | | | °C (°F) |
| 12 | Maximum Coil Temperature | 130 (266) | | | | °C (°F) |
| 13 | Bearing Type | Sintered Bronze Sleeve | | | | |
| 14 | Insulation Resistance at 500 VDC | 100.0 | | | | Mohms |
| 15 | Dielectric Withstanding Voltage | 650 for 2 seconds | | | | VAC |
| 16 | Weight | 88 (3.1) | | | | g (oz) |
| 17 | Leadwire | AWG #26, UL 1430 (105°C, 300V) | | | | |
| All Motor Data Values at 20°C Unless Otherwise Specified | | | | | | |

* Energize at Rated Current, 2 Phase On

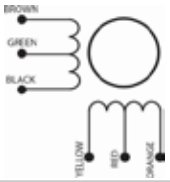


UNIPOLAR COIL

| YELLOW | ORANGE | BROWN | BLACK | RED/GREEN |
|---|---|---|---|---|
| + | - | + | - | + |
| + | - | - | + | + |
| - | + | - | + | + |
| - | + | + | - | + |
| + | - | + | - | + |

CW ↓ ↑ CC

VIEWED FROM OUTPUT SHAFT

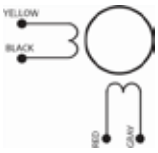


BIPOLAR COIL

| RED | GRAY | YELLOW | BLACK |
|---|---|---|---|
| + | - | + | - |
| + | - | - | + |
| - | + | - | + |
| - | + | + | - |
| + | - | + | - |

CW ↓ ↑ CCW

VIEWED FROM OUTPUT SHAFT

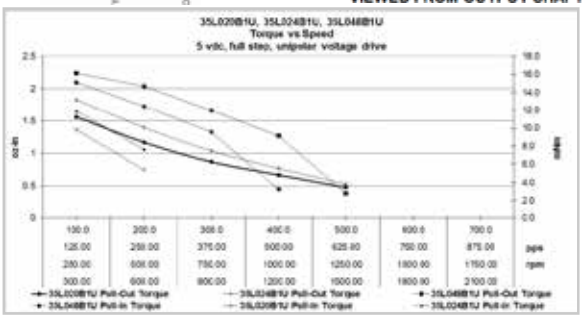


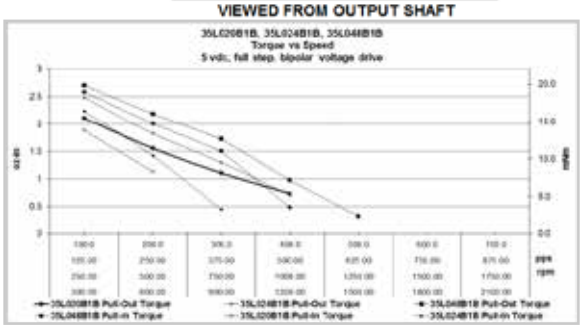


V121616

## 35L048D

RoHS Compliant

Ø35mm

54 mNm

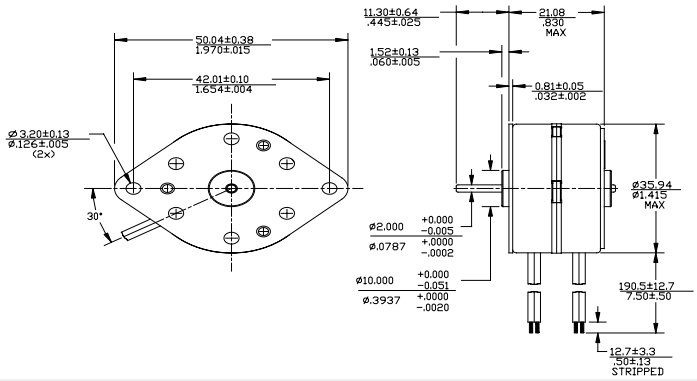


Dimensions in mm

### 35L048D

| Electrical Data | | 35L048D1U Unipolar | 35L048D2U Unipolar | 35L048D1B Bipolar | 35L048D2B Bipolar | |
|---|---|---|---|---|---|---|
| 1 | Operating Voltage | 5 | 12 | 5 | 12 | VDC |
| 2 | Resistance per Phase, ± 10% | 11.0 | 64.0 | 11.0 | 64.0 | Ohms |
| 3 | Inductance per Phase, typ | 7.4 | 35.0 | 13.0 | 60.0 | mH |
| 4 | Rated Current per Phase * | 0.45 | 0.19 | 0.45 | 0.19 | A |
| **Coil independent parameters** | | | | | | |
| 5 | Holding Torque, MIN * | 46 (6.5) | 46 (6.5) | 54 (7.6) | 54 (7.6) | mNm (oz-in) |
| 6 | Detent Torque, Max | 12.1 (1.8) | | | | mNm (oz-in) |
| 7 | Rotor Inertia | 4 (0.021) | | | | $gcm^2$ (oz-in-$s^2$) |
| 8 | Step Angle | 7.5 | | | | Degree |
| 9 | Absolute accuracy 2 ph. On, Full step | ± .5 | | | | Degree |
| 10 | Steps per Revolution | 48.0 | | | | |
| 11 | Ambient Temp Range (operating) | -20 to +70 (-4 to +158) | | | | °C (°F) |
| 12 | Maximum Coil Temperature | 130 (266) | | | | °C (°F) |
| 13 | Bearing Type | Sintered Bronze Sleeve | | | | |
| 14 | Insulation Resistance at 500 VDC | 100.0 | | | | Mohms |
| 15 | Dielectric Withstanding Voltage | 650 for 2 seconds | | | | VAC |
| 16 | Weight | 88 (3.1) | | | | g (oz) |
| 17 | Leadwire | AWG #26, UL 1430 (105°C, 300V) | | | | |
| All Motor Data Values at 20°C Unless Otherwise Specified | | | | | | |

* Energize at Rated Current, 2 Phase On

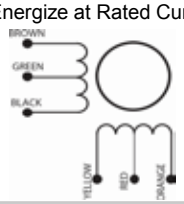


UNIPOLAR COIL

| YELLOW | ORANGE | BROWN | BLACK | RED/GREEN |
|---|---|---|---|---|
| + | - | + | - | + |
| + | - | - | + | + |
| - | + | - | + | + |
| - | + | + | - | + |
| + | - | + | - | + |

CW ↓ ↑ CCW

VIEWED FROM OUTPUT SHAFT

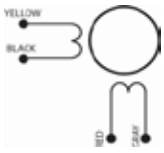


BIPOLAR COIL

| RED | GRAY | YELLOW | BLACK |
|---|---|---|---|
| + | - | + | - |
| + | - | - | + |
| - | + | - | + |
| - | + | + | - |
| + | - | + | - |

CW ↓ ↑ CCW

VIEWED FROM OUTPUT SHAFT

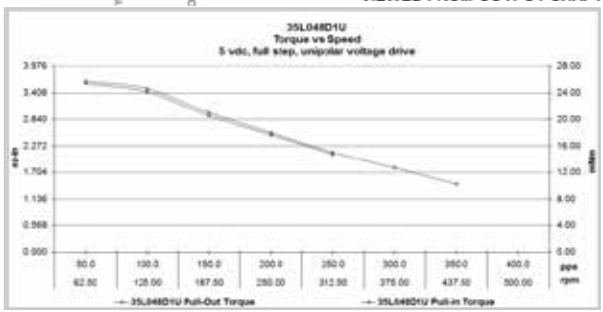


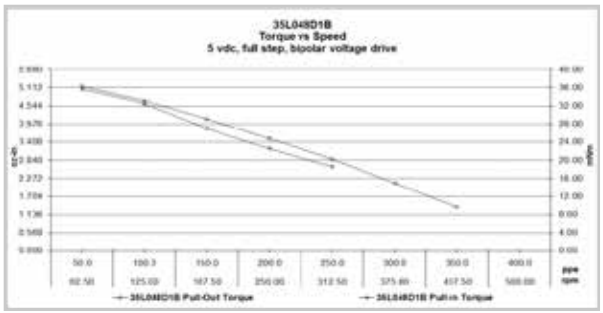


V121616

# 35M024B

RoHS Compliant

Ø35mm 20 mNm

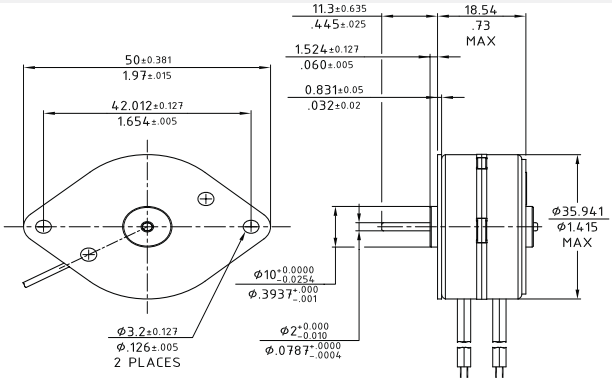


Dimensions in mm

## 35M024B

| Electrical Data | | 35M024B1U Unipolar | 35M024B2U Unipolar | 35M024B1B Bipolar | 35M024B2B Bipolar | |
|---|---|---|---|---|---|---|
| 1 | Operating Voltage | 5 | 12 | 5 | 12 | VDC |
| 2 | Resistance per Phase, ± 10% | 12.5 | 72.0 | 12.5 | 72.0 | Ohms |
| 3 | Inductance per Phase, typ | 7.2 | 32.8 | 14.2 | 76.0 | mH |
| 4 | Rated Current per Phase * | 0.40 | 0.17 | 0.40 | 0.17 | A |
| **Coil independent parameters** | | | | | | |
| 5 | Holding Torque, MIN * | 16.93 (2.4) | 16.93 (2.4) | 19.76 (2.8) | 19.76 (2.8) | mNm (oz-in) |
| 6 | Detent Torque, Max | 2.12 (0.3) | | | | mNm (oz-in) |
| 7 | Rotor Inertia | 2 (0.011) | | | | $gcm^2$ ($oz\text{-}in\text{-}s^2$) |
| 8 | Step Angle | 15.0 | | | | Degree |
| 9 | Absolute accuracy 2 ph. On, Full step | ± 1 | | | | Degree |
| 10 | Steps per Revolution | 24.0 | | | | |
| 11 | Ambient Temp Range (operating) | -20 to +70 (-4 to +158) | | | | °C (°F) |
| 12 | Maximum Coil Temperature | 130 (266) | | | | °C (°F) |
| 13 | Bearing Type | Sintered Bronze Sleeve | | | | |
| 14 | Insulation Resistance at 500 VDC | 100.0 | | | | Mohms |
| 15 | Dielectric Withstanding Voltage | 650 for 2 seconds | | | | VAC |
| 16 | Weight | 88 (3.1) | | | | g (oz) |
| 17 | Leadwire | AWG #26, UL 1430 (105°C, 300V) | | | | |
| All Motor Data Values at 20°C Unless Otherwise Specified | | | | | | |

* Energize at Rated Current, 2 Phase On

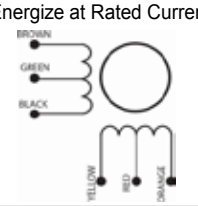


UNIPOLAR COIL

| YELLOW | ORANGE | BROWN | BLACK | RED/GREEN |
|---|---|---|---|---|
| + | - | + | - | + |
| + | - | - | + | + |
| - | + | - | + | + |
| - | + | + | - | + |
| + | - | + | - | + |

CW ↓ ↑ CC

VIEWED FROM OUTPUT SHAFT

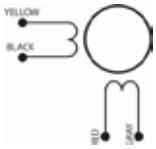


BIPOLAR COIL

| RED | GRAY | YELLOW | BLACK |
|---|---|---|---|
| + | - | + | - |
| + | - | - | + |
| - | + | - | + |
| - | + | + | - |
| + | - | + | - |

CW ↓ ↑ CCW

VIEWED FROM OUTPUT SHAFT

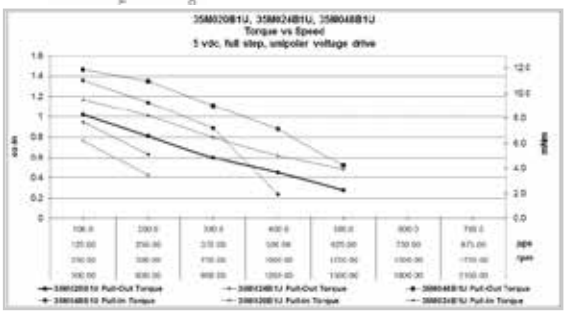


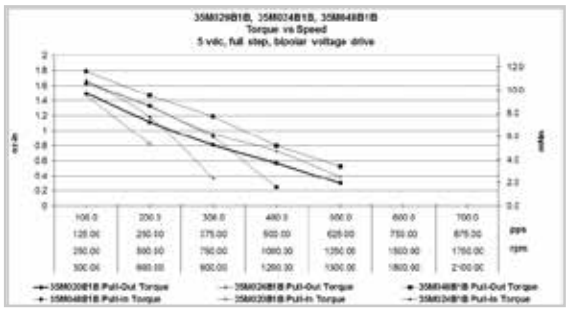


V121616

## 35M048B

RoHS Compliant

Ø35mm

20 mNm

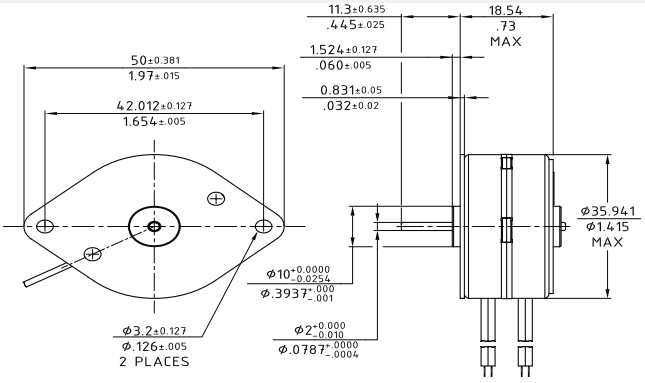


Dimensions in mm

### 35M048B

| Electrical Data | | 35M048B1U Unipolar | 35M048B2U Unipolar | 35M048B1B Bipolar | 35M048B2B Bipolar | |
|---|---|---|---|---|---|---|
| 1 | Operating Voltage | 5 | 12 | 5 | 12 | VDC |
| 2 | Resistance per Phase, ± 10% | 12.5 | 72.0 | 12.5 | 72.0 | Ohms |
| 3 | Inductance per Phase, typ | 7.8 | 36.0 | 16.4 | 86.0 | mH |
| 4 | Rated Current per Phase * | 0.40 | 0.17 | 0.40 | 0.17 | A |
| **Coil independent parameters** | | | | | | |
| 5 | Holding Torque, MIN * | 18.35 (2.6) | 18.35 (2.6) | 19.76 (2.8) | 19.76 (2.8) | mNm (oz-in) |
| 6 | Detent Torque, Max | 2.12 (0.3) | | | | mNm (oz-in) |
| 7 | Rotor Inertia | 2 (0.011) | | | | $gcm^2$ (oz-in-$s^2$) |
| 8 | Step Angle | 7.5 | | | | Degree |
| 9 | Absolute accuracy 2 ph. On, Full step | ± .5 | | | | Degree |
| 10 | Steps per Revolution | 48.0 | | | | |
| 11 | Ambient Temp Range (operating) | -20 to +70 (-4 to +158) | | | | °C (°F) |
| 12 | Maximum Coil Temperature | 130 (266) | | | | °C (°F) |
| 13 | Bearing Type | Sintered Bronze Sleeve | | | | |
| 14 | Insulation Resistance at 500 VDC | 100.0 | | | | Mohms |
| 15 | Dielectric Withstanding Voltage | 650 for 2 seconds | | | | VAC |
| 16 | Weight | 88 (3.1) | | | | g (oz) |
| 17 | Leadwire | AWG #26, UL 1430 (105°C, 300V) | | | | |
| All Motor Data Values at 20°C Unless Otherwise Specified | | | | | | |

* Energize at Rated Current, 2 Phase On

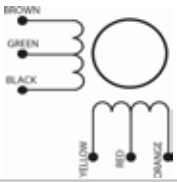


UNIPOLAR COIL

| YELLOW | ORANGE | BROWN | BLACK | RED/GREEN |
|---|---|---|---|---|
| + | - | + | - | + |
| + | - | - | + | + |
| - | + | - | + | + |
| - | + | + | - | + |
| + | - | + | - | + |

CW ↓ ↑ CC

VIEWED FROM OUTPUT SHAFT

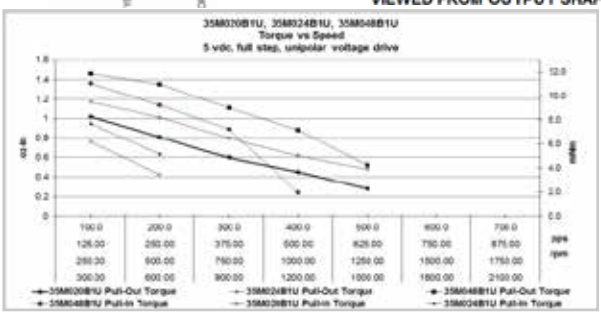


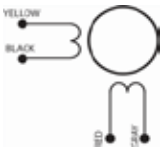


BIPOLAR COIL

| RED | GRAY | YELLOW | BLACK |
|---|---|---|---|
| + | - | + | - |
| + | - | - | + |
| - | + | - | + |
| - | + | + | - |
| + | - | + | - |

CW ↓ ↑ CCW

VIEWED FROM OUTPUT SHAFT

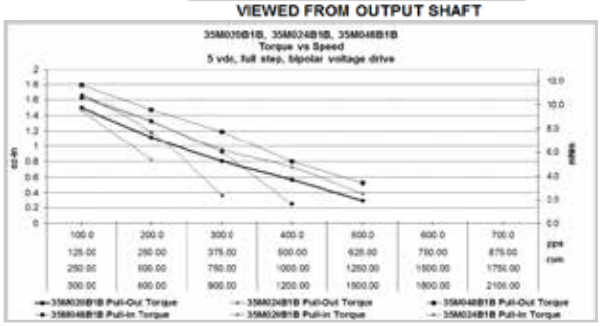


V121616

# 35M048D

RoHS Compliant

Ø35mm

25 mNm

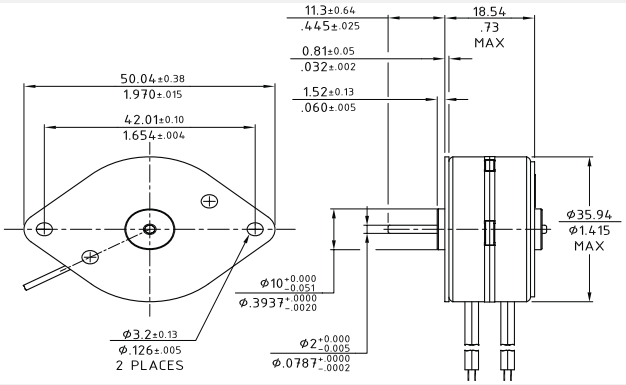


Dimensions in mm

## 35M048D

| Electrical Data | | 35M048D1U Unipolar | 35M048D2U Unipolar | 35M048D1B Bipolar | 35M048D2B Bipolar | |
|---|---|---|---|---|---|---|
| 1 | Operating Voltage | 5 | 12 | 5 | 12 | VDC |
| 2 | Resistance per Phase, ± 10% | 12.5 | 72.0 | 12.5 | 72.0 | Ohms |
| 3 | Inductance per Phase, typ | 8.5 | 38.0 | 16.3 | 90.0 | mH |
| 4 | Rated Current per Phase * | 0.40 | 0.17 | 0.40 | 0.17 | A |
| **Coil independent parameters** | | | | | | |
| 5 | Holding Torque, MIN * | 20 (2.8) | 20 (2.8) | 25 (3.5) | 25 (3.5) | mNm (oz-in) |
| 6 | Detent Torque, Max | 6.3 (0.89) | | | | mNm (oz-in) |
| 7 | Rotor Inertia | 2 (0.011) | | | | $gcm^2$ (oz-in-$s^2$) |
| 8 | Step Angle | 7.5 | | | | Degree |
| 9 | Absolute accuracy 2 ph. On, Full step | ± .5 | | | | Degree |
| 10 | Steps per Revolution | 48.0 | | | | |
| 11 | Ambient Temp Range (operating) | -20 to +70 (-4 to +158) | | | | °C (°F) |
| 12 | Maximum Coil Temperature | 130 (266) | | | | °C (°F) |
| 13 | Bearing Type | Sintered Bronze Sleeve | | | | |
| 14 | Insulation Resistance at 500 VDC | 100.0 | | | | Mohms |
| 15 | Dielectric Withstanding Voltage | 650 for 2 seconds | | | | VAC |
| 16 | Weight | 88 (3.1) | | | | g (oz) |
| 17 | Leadwire | AWG #26, UL 1430 (105°C, 300V) | | | | |

All Motor Data Values at 20°C Unless Otherwise Specified

* Energize at Rated Current, 2 Phase On

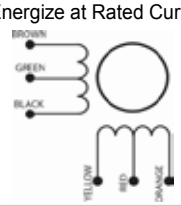


UNIPOLAR COIL

| YELLOW | ORANGE | BROWN | BLACK | RED/GREEN |
|---|---|---|---|---|
| + | - | + | - | + |
| + | - | - | + | + |
| - | + | - | + | + |
| - | + | + | - | + |
| + | - | + | - | + |

CW ↓ ↑ CC

VIEWED FROM OUTPUT SHAFT

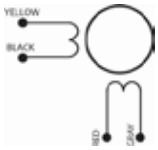


BIPOLAR COIL

| RED | GRAY | YELLOW | BLACK |
|---|---|---|---|
| + | - | + | - |
| + | - | - | + |
| - | + | - | + |
| - | + | + | - |
| + | - | + | - |

CW ↓ ↑ CCW

VIEWED FROM OUTPUT SHAFT

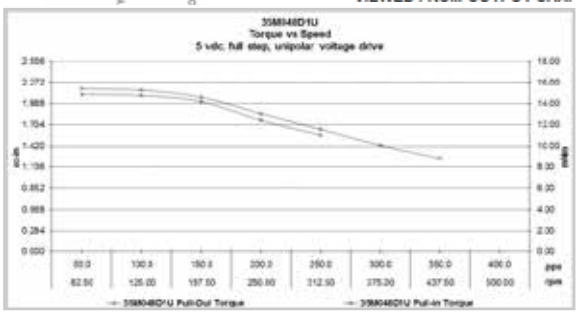


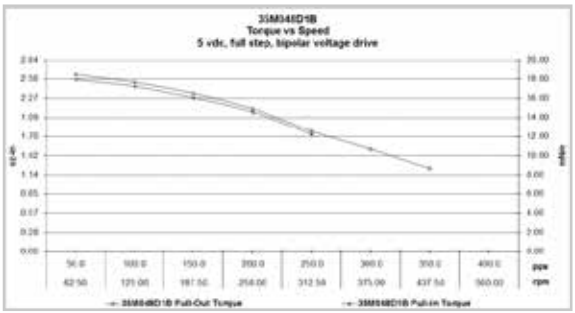


V121616

## 42L048D

RoHS Compliant

Ø42mm 131 mNm

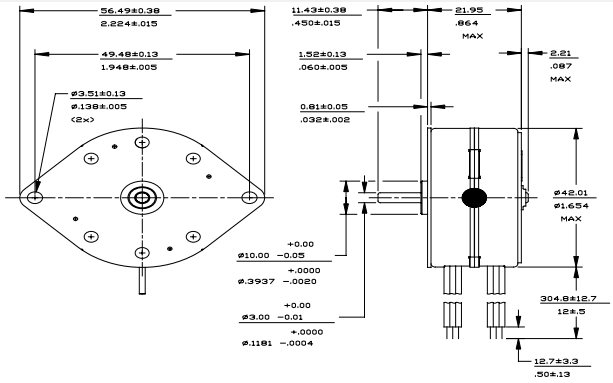


Dimensions in mm

### 42L048D

| Electrical Data | | 42L048D1U Unipolar | 42L048D2U Unipolar | 42L048D1B Bipolar | 42L048D2B Bipolar | |
|---|---|---|---|---|---|---|
| 1 | Operating Voltage | 5 | 12 | 5 | 12 | VDC |
| 2 | Resistance per Phase, ± 10% | 5.2 | 30.0 | 5.2 | 30.0 | Ohms |
| 3 | Inductance per Phase, typ | 2.1 | 11.3 | 4.2 | 22.3 | mH |
| 4 | Rated Current per Phase * | 0.96 | 0.40 | 0.96 | 0.40 | A |
| **Coil independent parameters** | | | | | | |
| 5 | Holding Torque, MIN * | 106 (15.1) | 106 (15.1) | 131 (18.5) | 131 (18.5) | mNm (oz-in) |
| 6 | Detent Torque, Max | 29.7 (4.2) | | | | mNm (oz-in) |
| 7 | Rotor Inertia | 19.5 (0.1066) | | | | $gcm^2$ (oz-in-$s^2$) |
| 8 | Step Angle | 7.5 | | | | Degree |
| 9 | Absolute accuracy 2 ph. On, Full step | ± .5 | | | | Degree |
| 10 | Steps per Revolution | 48.0 | | | | |
| 11 | Ambient Temp Range (operating) | -20 to +70 (-4 to +158) | | | | °C (°F) |
| 12 | Maximum Coil Temperature | 130 (266) | | | | °C (°F) |
| 13 | Bearing Type | Sintered Bronze Sleeve | | | | |
| 14 | Insulation Resistance at 500 VDC | 100.0 | | | | Mohms |
| 15 | Dielectric Withstanding Voltage | 650 for 2 seconds | | | | VAC |
| 16 | Weight | 116.4 (4.1) | | | | g (oz) |
| 17 | Leadwire | AWG #26, UL 1430 (105°C, 300V) | | | | |
| All Motor Data Values at 20°C Unless Otherwise Specified | | | | | | |

* Energize at Rated Current, 2 Phase On

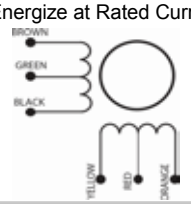


UNIPOLAR COIL

| YELLOW | ORANGE | BROWN | BLACK | RED/GREEN |
|---|---|---|---|---|
| + | - | + | - | + |
| + | - | - | + | + |
| - | + | - | + | + |
| - | + | + | - | + |
| + | - | + | - | + |

CW ↓ ↑ CC

VIEWED FROM OUTPUT SHAFT

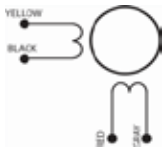


BIPOLAR COIL

| RED | GRAY | YELLOW | BLACK |
|---|---|---|---|
| + | - | + | - |
| + | - | - | + |
| - | + | - | + |
| - | + | + | - |
| + | - | + | - |

CW ↓ ↑ CCW

VIEWED FROM OUTPUT SHAFT

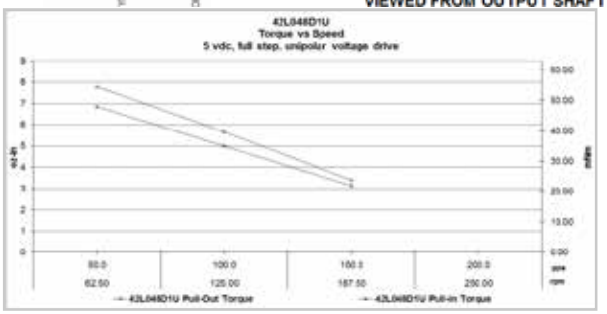


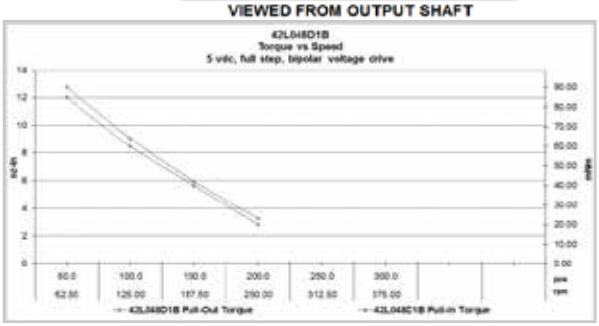


V121616

## 42M048C

RoHS Compliant

Ø42mm 83.8 mNm

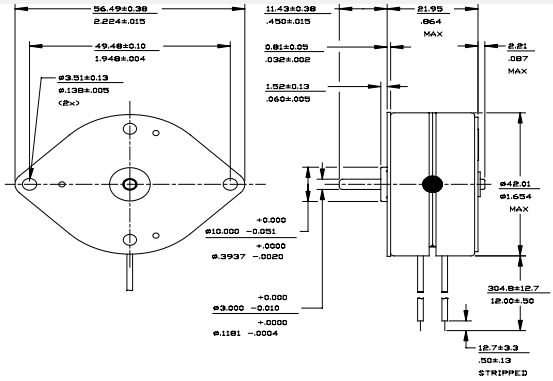


Dimensions in mm

### 42M048C

| Electrical Data | | 42M048C1U Unipolar | 42M048C2U Unipolar | 42M048C1B Bipolar | 42M048C2B Bipolar | |
|---|---|---|---|---|---|---|
| 1 | Operating Voltage | 5 | 12 | 5 | 12 | VDC |
| 2 | Resistance per Phase, ± 10% | 9.1 | 52.4 | 9.1 | 52.4 | Ohms |
| 3 | Inductance per Phase, typ | 8.1 | 51.7 | 16.7 | 85.7 | mH |
| 4 | Rated Current per Phase * | 0.55 | 0.23 | 0.55 | 0.23 | A |
| **Coil independent parameters** | | | | | | |
| 5 | Holding Torque, MIN * | 66.2 (9.4) | 66.2 (9.4) | 83.8 (11.9) | 83.8 (11.9) | mNm (oz-in) |
| 6 | Detent Torque, Max | 12.7 (1.8) | | | | mNm (oz-in) |
| 7 | Rotor Inertia | 12.5 (0.068) | | | | $gcm^2$ (oz-in-$s^2$) |
| 8 | Step Angle | 7.5 | | | | Degree |
| 9 | Absolute accuracy 2 ph. On, Full step | ± .5 | | | | Degree |
| 10 | Steps per Revolution | 48.0 | | | | |
| 11 | Ambient Temp Range (operating) | -20 to +70 (-4 to +158) | | | | °C (°F) |
| 12 | Maximum Coil Temperature | 130 (266) | | | | °C (°F) |
| 13 | Bearing Type | Sintered Bronze Sleeve | | | | |
| 14 | Insulation Resistance at 500 VDC | 100.0 | | | | Mohms |
| 15 | Dielectric Withstanding Voltage | 650 for 2 seconds | | | | VAC |
| 16 | Weight | 145 (5.1) | | | | g (oz) |
| 17 | Leadwire | AWG #26, UL 1430 (105°C, 300V) | | | | |
| All Motor Data Values at 20°C Unless Otherwise Specified | | | | | | |

* Energize at Rated Current, 2 Phase On

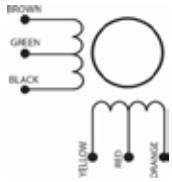


UNIPOLAR COIL

| YELLOW | ORANGE | BROWN | BLACK | RED/GREEN |
|---|---|---|---|---|
| + | - | + | - | + |
| + | - | - | + | + |
| - | + | - | + | + |
| - | + | + | - | + |
| + | - | + | - | + |

CW ↓ ↑ CCW

VIEWED FROM OUTPUT SHAFT

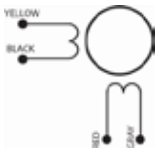


BIPOLAR COIL

| RED | GRAY | YELLOW | BLACK |
|---|---|---|---|
| + | - | + | - |
| + | - | - | + |
| - | + | - | + |
| - | + | + | - |
| + | - | + | - |

CW ↓ ↑ CCW

VIEWED FROM OUTPUT SHAFT

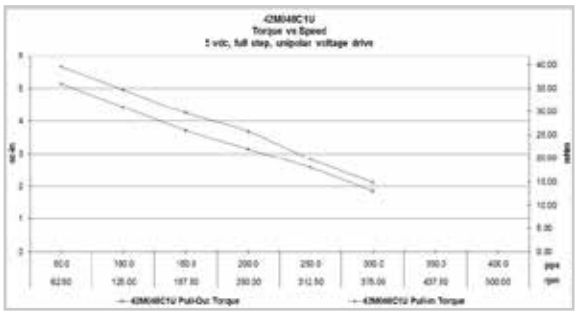


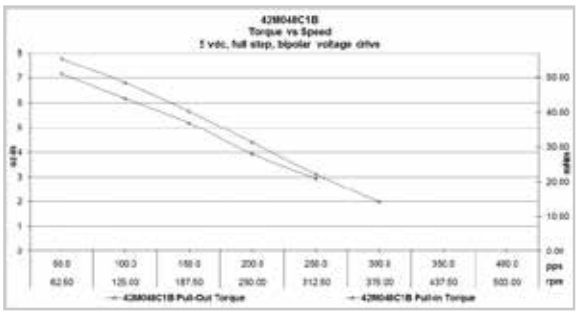


V121616

## 42M048D

RoHS Compliant

Ø42mm 114.4 mNm

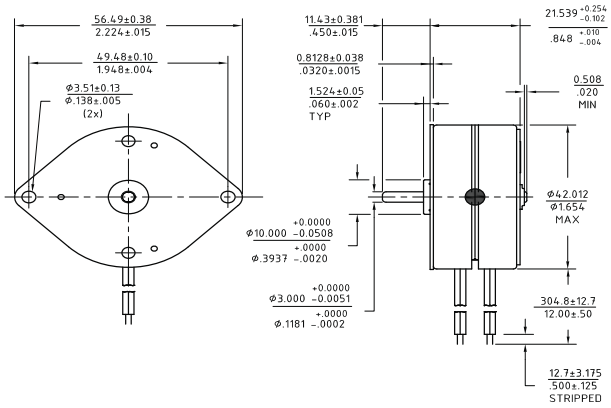


Dimensions in mm

### 42M048D

| Electrical Data | | 42M048D1U Unipolar | 42M048D2U Unipolar | 42M048D1B Bipolar | 42M048D2B Bipolar | |
|---|---|---|---|---|---|---|
| 1 | Operating Voltage | 5 | 12 | 5 | 12 | VDC |
| 2 | Resistance per Phase, ± 10% | 9.1 | 52.4 | 9.1 | 52.4 | Ohms |
| 3 | Inductance per Phase, typ | 6.5 | 42.6 | 14.1 | 69.3 | mH |
| 4 | Rated Current per Phase * | 0.55 | 0.23 | 0.55 | 0.23 | A |
| **Coil independent parameters** | | | | | | |
| 5 | Holding Torque, MIN * | 101.7 (14.4) | 101.7 (14.4) | 114.4 (16.21) | 114.4 (16.21) | mNm (oz-in) |
| 6 | Detent Torque, Max | 29.66 (4.2) | | | | mNm (oz-in) |
| 7 | Rotor Inertia | 9.5 (0.05195) | | | | $gcm^2$ ($oz\text{-}in\text{-}s^2$) |
| 8 | Step Angle | 7.5 | | | | Degree |
| 9 | Absolute accuracy 2 ph. On, Full step | ±0.5 | | | | Degree |
| 10 | Steps per Revolution | 48.0 | | | | |
| 11 | Ambient Temp Range (operating) | -20 TO 70 (-4 TO 158) | | | | ℃ (℉) |
| 12 | Maximum Coil Temperature | 130 (266) | | | | ℃ (℉) |
| 13 | Bearing Type | Sintered Bronze Sleeve | | | | |
| 14 | Insulation Resistance at 500 VDC | 100.0 | | | | Mohms |
| 15 | Dielectric Withstanding Voltage | 650 VRMS for 2 seconds | | | | VAC |
| 16 | Weight | 144.58 (5.1) | | | | g (oz) |
| 17 | Leadwire | AWG #26, UL 1430 (105℃, 300V) | | | | |
| All Motor Data Values at 20℃ Unless Otherwise Specified | | | | | | |

* Energize at Rated Current, 2 Phase On

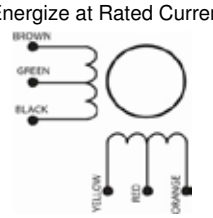


UNIPOLAR COIL

| YELLOW | ORANGE | BROWN | BLACK | RED/GREEN |
|---|---|---|---|---|
| + | - | + | - | + |
| + | - | - | + | + |
| - | + | - | + | + |
| - | + | + | - | + |
| + | - | + | - | + |

CW ↓ ↑ CC

VIEWED FROM OUTPUT SHAFT

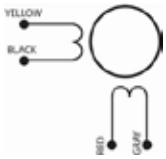


BIPOLAR COIL

| RED | GRAY | YELLOW | BLACK |
|---|---|---|---|
| + | - | + | - |
| + | - | - | + |
| - | + | - | + |
| - | + | + | - |
| + | - | + | - |

CW ↓ ↑ CCW

VIEWED FROM OUTPUT SHAFT

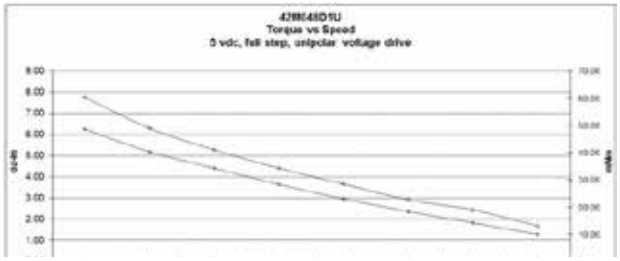


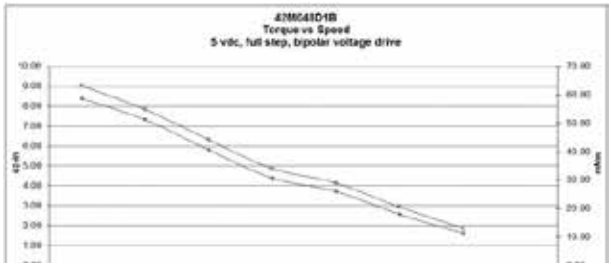


V121616

## 42M100B

RoHS Compliant

Ø42mm 49.4 mNm

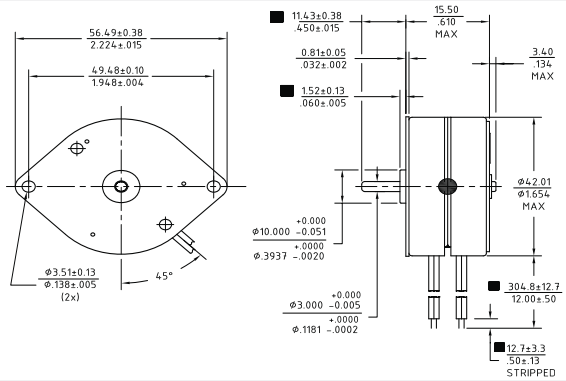


Dimensions in mm

### 42M100B

| Electrical Data | | 42M100B1U Unipolar | 42M100B2U Unipolar | 42M100B1B Bipolar | 42M100B2B Bipolar | |
|---|---|---|---|---|---|---|
| 1 | Operating Voltage | 5 | 12 | 5 | 12 | VDC |
| 2 | Resistance per Phase, ± 10% | 12.5 | 75.0 | 12.5 | 75.0 | Ohms |
| 3 | Inductance per Phase, typ | 6.6 | 37.7 | 11.3 | 62.1 | mH |
| 4 | Rated Current per Phase * | 0.40 | 0.16 | 0.40 | 0.16 | A |
| **Coil independent parameters** | | | | | | |
| 5 | Holding Torque, MIN * | 45.2 (6.4) | | 49.4 (7) | | mNm (oz-in) |
| 6 | Detent Torque, Max | 5 (0.7) | | | | mNm (oz-in) |
| 7 | Rotor Inertia | 11.8 (0.065) | | | | $gcm^2$ (oz-in-$s^2$) |
| 8 | Step Angle | 3.6 | | | | Degree |
| 9 | Absolute accuracy 2 ph. On, Full step | ±0.5 | | | | Degree |
| 10 | Steps per Revolution | 100.0 | | | | |
| 11 | Ambient Temp Range (operating) | -20 TO 70 (-4 TO 158) | | | | °C (°F) |
| 12 | Maximum Coil Temperature | 130 (266) | | | | °C (°F) |
| 13 | Bearing Type | Sintered Bronze Sleeve | | | | |
| 14 | Insulation Resistance at 500 VDC | 100.0 | | | | Mohms |
| 15 | Dielectric Withstanding Voltage | 650 VRMS for 2 seconds | | | | VAC |
| 16 | Weight | 87.89 (3.1) | | | | g (oz) |
| 17 | Leadwire | AWG#28, UL3265 (125°C, 150V) | | | | |
| All Motor Data Values at 20°C Unless Otherwise Specified | | | | | | |

* Energize at Rated Current, 2 Phase On

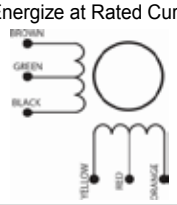


UNIPOLAR COIL

| YELLOW | ORANGE | BROWN | BLACK | RED/GREEN |
|---|---|---|---|---|
| + | - | + | - | + |
| + | - | - | + | + |
| - | + | - | + | + |
| - | + | + | - | + |
| + | - | + | - | + |

CW ↓ ↑ CC

VIEWED FROM OUTPUT SHAFT

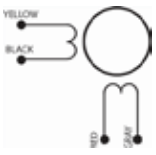


BIPOLAR COIL

| RED | GRAY | YELLOW | BLACK |
|---|---|---|---|
| + | - | + | - |
| + | - | - | + |
| - | + | - | + |
| - | + | + | - |
| + | - | + | - |

CW ↓ ↑ CCW

VIEWED FROM OUTPUT SHAFT

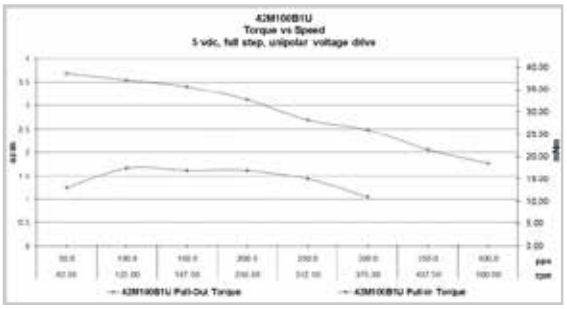


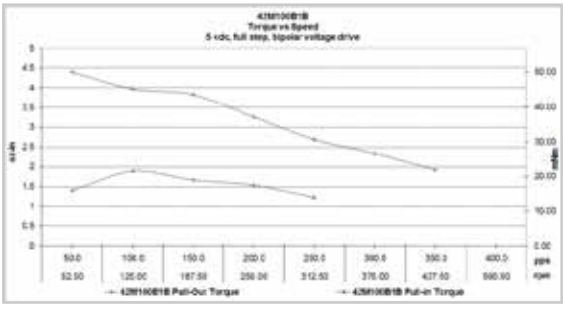

V121616

## 42M100D

RoHS Compliant

Ø42mm 60.7 mNm

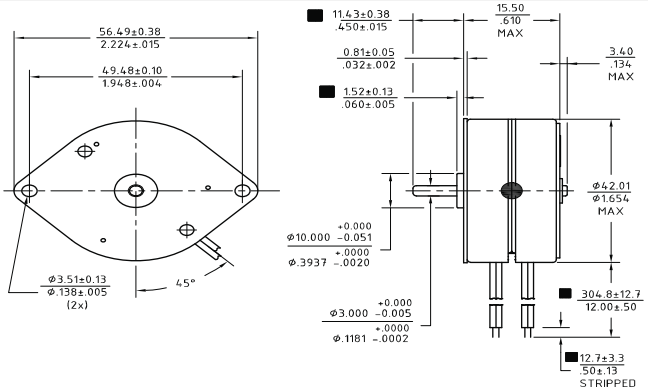


Dimensions in mm

### 42M100D

| Electrical Data | | 42M100D1U Unipolar | 42M100D2U Unipolar | 42M100D1B Bipolar | 42M100D2B Bipolar | |
|---|---|---|---|---|---|---|
| 1 | Operating Voltage | 5 | 12 | 5 | 12 | VDC |
| 2 | Resistance per Phase, ± 10% | 12.5 | 75.0 | 12.5 | 75.0 | Ohms |
| 3 | Inductance per Phase, typ | 6.4 | 36.7 | 10.8 | 60.7 | mH |
| 4 | Rated Current per Phase * | 0.40 | 0.16 | 0.40 | 0.16 | A |
| **Coil independent parameters** | | | | | | |
| 5 | Holding Torque, MIN * | 52.2 (7.4) | 52.2 (7.4) | 60.7 (8.6) | 60.7 (8.6) | mNm (oz-in) |
| 6 | Detent Torque, Max | 7.1 (1) | | | | mNm (oz-in) |
| 7 | Rotor Inertia | 9.5 (0.052) | | | | $gcm^2$ (oz-in-$s^2$) |
| 8 | Step Angle | 3.6 | | | | Degree |
| 9 | Absolute accuracy 2 ph. On, Full step | ±0.5 | | | | Degree |
| 10 | Steps per Revolution | 100.0 | | | | |
| 11 | Ambient Temp Range (operating) | -20 TO 70 (-4 TO 158) | | | | ℃ (℉) |
| 12 | Maximum Coil Temperature | 130 (266) | | | | ℃ (℉) |
| 13 | Bearing Type | Sintered Bronze Sleeve | | | | |
| 14 | Insulation Resistance at 500 VDC | 100.0 | | | | Mohms |
| 15 | Dielectric Withstanding Voltage | 650±50 VRMS for 2 seconds | | | | VAC |
| 16 | Weight | 87.89 (3.1) | | | | g (oz) |
| 17 | Leadwire | AWG#28, UL3265 (125℃, 150V) | | | | |

All Motor Data Values at 20℃ Unless Otherwise Specified

* Energize at Rated Current, 2 Phase On

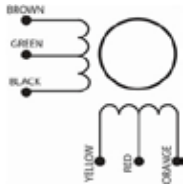


UNIPOLAR COIL

| YELLOW | ORANGE | BROWN | BLACK | RED/GREEN |
|---|---|---|---|---|
| + | - | + | - | + |
| + | - | - | + | + |
| - | + | - | + | + |
| - | + | + | - | + |
| + | - | + | - | + |

CW ↓ ↑ CCW

VIEWED FROM OUTPUT SHAFT

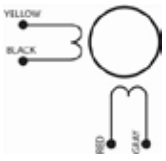


BIPOLAR COIL

| RED | GRAY | YELLOW | BLACK |
|---|---|---|---|
| + | - | + | - |
| + | - | - | + |
| - | + | - | + |
| - | + | + | - |
| + | - | + | - |

CW ↓ ↑ CCW

VIEWED FROM OUTPUT SHAFT

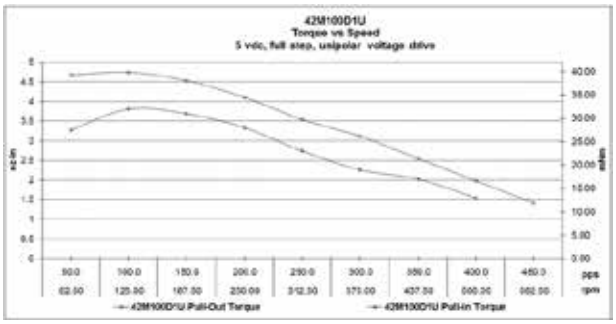


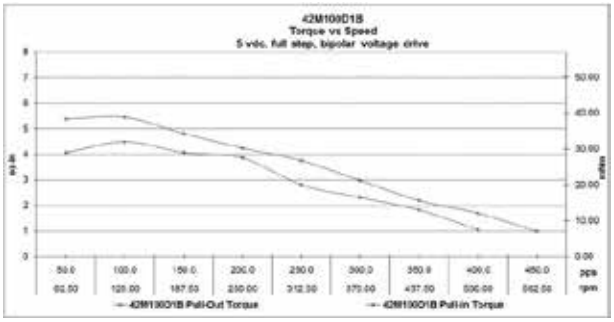


V121616

## 42S048D

RoHS Compliant

Ø42mm

60 mNm

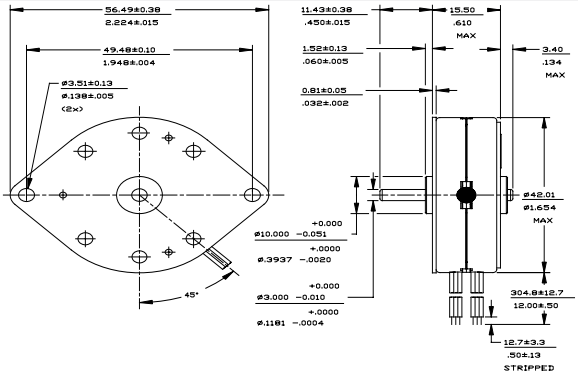


Dimensions in mm

### 42S048D

| Electrical Data | | 42S048D1U Unipolar | 42S048D2U Unipolar | 42S048D1B Bipolar | 42S048D2B Bipolar | |
|---|---|---|---|---|---|---|
| 1 | Operating Voltage | 5 | 12 | 5 | 12 | VDC |
| 2 | Resistance per Phase, ± 10% | 12.5 | 75.0 | 12.5 | 75.0 | Ohms |
| 3 | Inductance per Phase, typ | 6.4 | 34.1 | 10.4 | 58.0 | mH |
| 4 | Rated Current per Phase * | 0.40 | 0.16 | 0.40 | 0.16 | A |
| **Coil independent parameters** | | | | | | |
| 5 | Holding Torque, MIN * | 50.8 (7.2) | 50.8 (7.2) | 60 (8.5) | 60 (8.5) | mNm (oz-in) |
| 6 | Detent Torque, Max | 12 (1.7) | | | | mNm (oz-in) |
| 7 | Rotor Inertia | 9.5 (0.052) | | | | $gcm^2$ (oz-in-$s^2$) |
| 8 | Step Angle | 7.5 | | | | Degree |
| 9 | Absolute accuracy 2 ph. On, Full step | ± .5 | | | | Degree |
| 10 | Steps per Revolution | 48.0 | | | | |
| 11 | Ambient Temp Range (operating) | -20 to +70 (-4 to +158) | | | | °C (°F) |
| 12 | Maximum Coil Temperature | 130 (266) | | | | °C (°F) |
| 13 | Bearing Type | Sintered Bronze Sleeve | | | | |
| 14 | Insulation Resistance at 500 VDC | 100.0 | | | | Mohms |
| 15 | Dielectric Withstanding Voltage | 650 for 2 seconds | | | | VAC |
| 16 | Weight | 88 (3.1) | | | | g (oz) |
| 17 | Leadwire | AWG#28, UL3265 (125°C, 150V) | | | | |
| All Motor Data Values at 20°C Unless Otherwise Specified | | | | | | |

* Energize at Rated Current, 2 Phase On

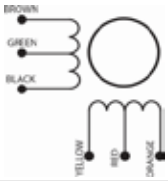


UNIPOLAR COIL

| YELLOW | ORANGE | BROWN | BLACK | RED/GREEN |
|---|---|---|---|---|
| + | - | + | - | + |
| + | - | - | + | + |
| - | + | - | + | + |
| - | + | + | - | + |
| + | - | + | - | + |

CW ↓ ↑ CC

VIEWED FROM OUTPUT SHAFT

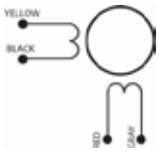


BIPOLAR COIL

| RED | GRAY | YELLOW | BLACK |
|---|---|---|---|
| + | - | + | - |
| + | - | - | + |
| - | + | - | + |
| - | + | + | - |
| + | - | + | - |

CW ↓ ↑ CCW

VIEWED FROM OUTPUT SHAFT

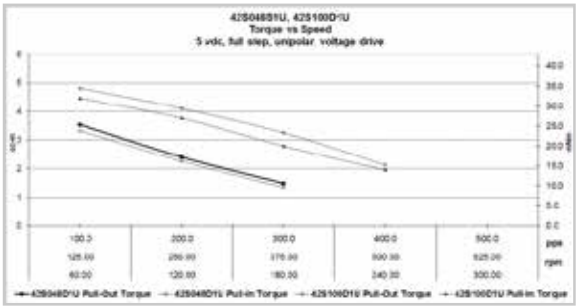


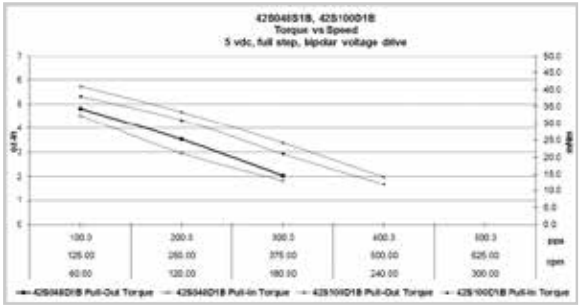


V121616

## 42S100D

RoHS Compliant

Ø42mm

53 mNm

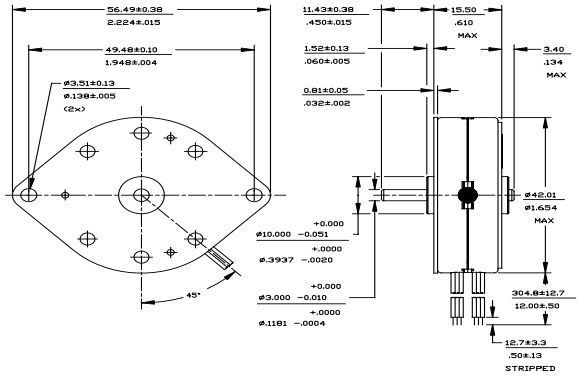


Dimensions in mm

### 42S100D

| Electrical Data | | 42S100D1U Unipolar | 42S100D2U Unipolar | 42S100D1B Bipolar | 42S100D2B Bipolar | |
|---|---|---|---|---|---|---|
| 1 | Operating Voltage | 5 | 12 | 5 | 12 | VDC |
| 2 | Resistance per Phase, ± 10% | 12.5 | 75.0 | 12.5 | 75.0 | Ohms |
| 3 | Inductance per Phase, typ | 6.4 | 36.7 | 10.8 | 60.7 | mH |
| 4 | Rated Current per Phase * | 0.40 | 0.16 | 0.40 | 0.16 | A |
| **Coil independent parameters** | | | | | | |
| 5 | Holding Torque, MIN * | 49.4 (7) | 49.4 (7) | 53 (7.5) | 53 (7.5) | mNm (oz-in) |
| 6 | Detent Torque, Max | 11.3 (1.6) | | | | mNm (oz-in) |
| 7 | Rotor Inertia | 9.5 (0.052) | | | | $gcm^2$ (oz-in-$s^2$) |
| 8 | Step Angle | 3.6 | | | | Degree |
| 9 | Absolute accuracy 2 ph. On, Full step | ± .4 | | | | Degree |
| 10 | Steps per Revolution | 100 | | | | |
| 11 | Ambient Temp Range (operating) | -20 to +70 (-4 to +158) | | | | °C (°F) |
| 12 | Maximum Coil Temperature | 130 (266) | | | | °C (°F) |
| 13 | Bearing Type | Sintered Bronze Sleeve | | | | |
| 14 | Insulation Resistance at 500 VDC | 100 | | | | Mohms |
| 15 | Dielectric Withstanding Voltage | 650 for 2 seconds | | | | VAC |
| 16 | Weight | 88 (3.1) | | | | g (oz) |
| 17 | Leadwire | AWG#28, UL3265 (125°C, 150V) | | | | |
| All Motor Data Values at 20°C Unless Otherwise Specified | | | | | | |

* Energize at Rated Current, 2 Phase On

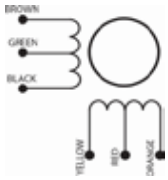


UNIPOLAR COIL

| YELLOW | ORANGE | BROWN | BLACK | RED/GREEN |
|---|---|---|---|---|
| + | - | + | - | + |
| + | - | - | + | + |
| - | + | - | + | + |
| - | + | + | - | + |
| + | - | + | - | + |

CW ↓ ↑ CC

VIEWED FROM OUTPUT SHAFT

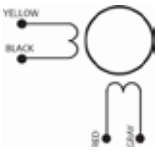


BIPOLAR COIL

| RED | GRAY | YELLOW | BLACK |
|---|---|---|---|
| + | - | + | - |
| + | - | - | + |
| - | + | - | + |
| - | + | + | - |
| + | - | + | - |

CW ↓ ↑ CCW

VIEWED FROM OUTPUT SHAFT

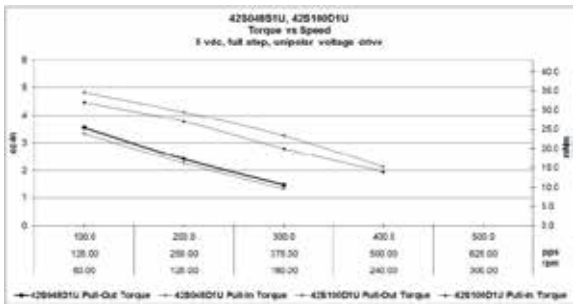


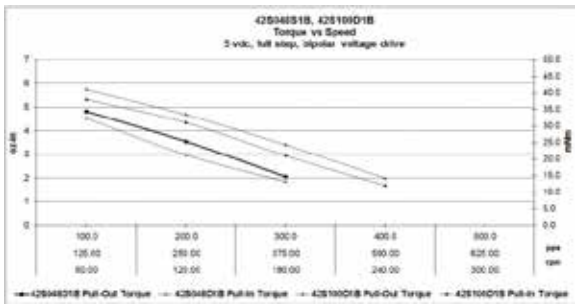


V121616

## 44M100D

RoHS Compliant | Ø44mm | 46.6 mNm

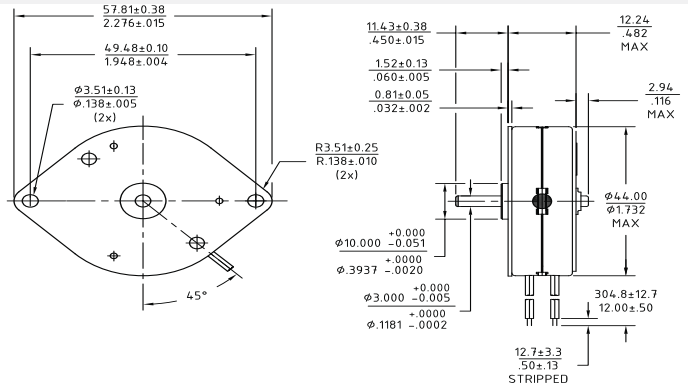


Dimensions in mm

### 44M100D

| Electrical Data | | 44M100D1B Bipolar | 44M100D2B Bipolar | |
|---|---|---|---|---|
| 1 | Operating Voltage | 5 | 12 | VDC |
| 2 | Resistance per Phase, ± 10% | 12.5 | 70.0 | Ohms |
| 3 | Inductance per Phase, typ | 6.7 | 35.0 | mH |
| 4 | Rated Current per Phase * | 0.40 | 0.17 | A |
| **Coil independent parameters** | | | | |
| 5 | Holding Torque, MIN * | 46.6 (6.6) | | mNm (oz-in) |
| 6 | Detent Torque, Max | 8.47 (1.2) | | mNm (oz-in) |
| 7 | Rotor Inertia | 8.3 (0.045) | | $gcm^2$ (oz-in-$s^2$) |
| 8 | Step Angle | 3.6 | | Degree |
| 9 | Absolute accuracy 2 ph. On, Full step | ±0.4 | | Degree |
| 10 | Steps per Revolution | 100 | | |
| 11 | Ambient Temp Range (operating) | -20 TO 70 (-4 TO 158) | | °C (°F) |
| 12 | Maximum Coil Temperature | 130 (266) | | °C (°F) |
| 13 | Bearing Type | Sintered Bronze Sleeve | | |
| 14 | Insulation Resistance at 500 VDC | 100 | | Mohms |
| 15 | Dielectric Withstanding Voltage | 650 VRMS for 2 seconds | | VAC |
| 16 | Weight | 88 (3.1) | | g (oz) |
| 17 | Leadwire | AWG#28, UL3265 (125°C, 150V) | | |
| All Motor Data Values at 20°C Unless Otherwise Specified | | | | |

* Energize at Rated Current, 2 Phase On

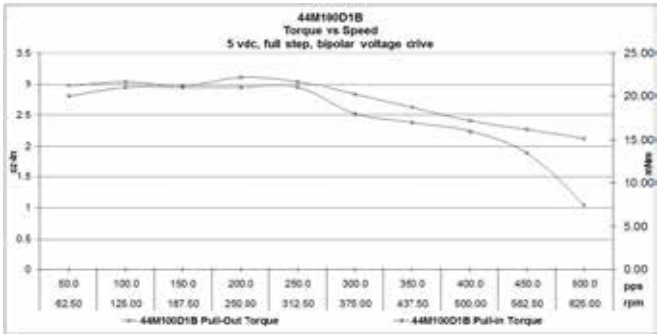


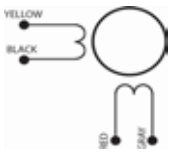


| BIPOLAR COIL | | | |
|---|---|---|---|
| RED | GRAY | YELLOW | BLACK |
| + | - | + | - |
| + | - | - | + |
| - | + | - | + |
| - | + | + | - |
| + | - | + | - |

CW ↓ ↑ CCW

VIEWED FROM OUTPUT SHAFT

V121616

## 57L048B

RoHS Compliant

Ø57mm 110.8 mNm

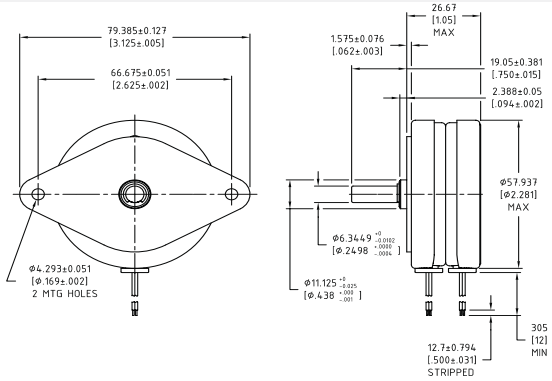


Dimensions in mm

### 57L048B

| Electrical Data | | 57L048B1U Unipolar | 57L048B2U Unipolar | 57L048B1B Bipolar | 57L048B2B Bipolar | |
|---|---|---|---|---|---|---|
| 1 | Operating Voltage | 5 | 12 | 5 | 12 | VDC |
| 2 | Resistance per Phase, ± 10% | 6.3 | 36.0 | 6.3 | 36.0 | Ohms |
| 3 | Inductance per Phase, typ | 7.0 | 36.8 | 14.2 | 78.8 | mH |
| 4 | Rated Current per Phase * | 0.79 | 0.33 | 0.79 | 0.33 | A |
| **Coil independent parameters** | | | | | | |
| 5 | Holding Torque, MIN * | 98.8 (14) | 98.8 (14) | 110.8 (15.7) | 110.8 (15.7) | mNm (oz-in) |
| 6 | Detent Torque, Max | 9.9 (1.4) | | | | mNm (oz-in) |
| 7 | Rotor Inertia | 34 (0.19) | | | | $gcm^2$ (oz-in-$s^2$) |
| 8 | Step Angle | 7.5 | | | | Degree |
| 9 | Absolute accuracy 2 ph. On, Full step | ±0.5 | | | | Degree |
| 10 | Steps per Revolution | 48 | | | | |
| 11 | Ambient Temp Range (operating) | -20 TO 70 (-4 TO 158) | | | | °C (°F) |
| 12 | Maximum Coil Temperature | 130 (266) | | | | °C (°F) |
| 13 | Bearing Type | Sintered Bronze Sleeve | | | | |
| 14 | Insulation Resistance at 500 VDC | 100 | | | | Mohms |
| 15 | Dielectric Withstanding Voltage | 650 VRMS for 2 seconds | | | | VAC |
| 16 | Weight | 255.15 (9) | | | | g (oz) |
| 17 | Leadwire | AWG #26, UL1430 (105°C, 300V) | | | | |
| All Motor Data Values at 20°C Unless Otherwise Specified | | | | | | |

* Energize at Rated Current, 2 Phase On

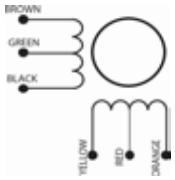


UNIPOLAR COIL

| YELLOW | ORANGE | BROWN | BLACK | RED/GREEN |
|---|---|---|---|---|
| + | - | + | - | + |
| + | - | - | + | + |
| - | + | - | + | + |
| - | + | + | - | + |
| + | - | + | - | + |

CW ↓ ↑ CC

VIEWED FROM OUTPUT SHAFT

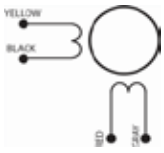


BIPOLAR COIL

| RED | GRAY | YELLOW | BLACK |
|---|---|---|---|
| + | - | + | - |
| + | - | - | + |
| - | + | - | + |
| - | + | + | - |
| + | - | + | - |

CW ↓ ↑ CCW

VIEWED FROM OUTPUT SHAFT

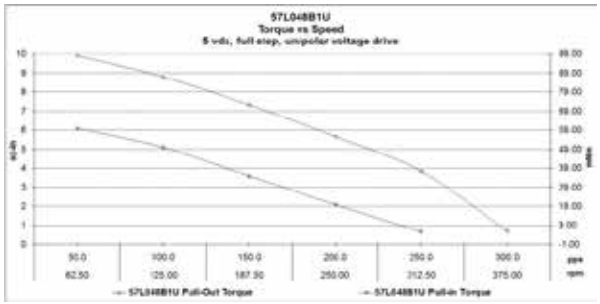


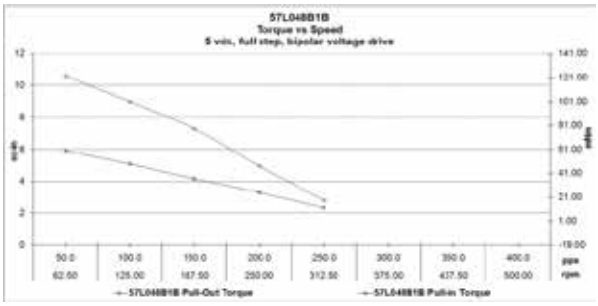


V121616

# 60L024B

RoHS Compliant

Ø60mm 169.5 mNm

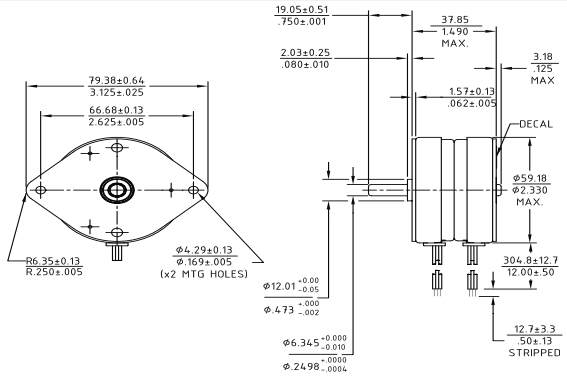


Dimensions in mm

## 60L024B

| Electrical Data | | 60L024B1U Unipolar | 60L024B2U Unipolar | 60L024B1B Bipolar | 60L024B2B Bipolar | |
|---|---|---|---|---|---|---|
| 1 | Operating Voltage | 5 | 12 | 5 | 12 | VDC |
| 2 | Resistance per Phase, ± 10% | 4.6 | 26.2 | 4.6 | 26.2 | Ohms |
| 3 | Inductance per Phase, typ | 6.0 | 32.0 | 11.5 | 65.0 | mH |
| 4 | Rated Current per Phase * | 1.09 | 0.46 | 1.09 | 0.46 | A |
| **Coil independent parameters** | | | | | | |
| 5 | Holding Torque, MIN * | 130.64 (18.5) | 130.64 (18.5) | 169.48 (24) | 169.48 (24) | mNm (oz-in) |
| 6 | Detent Torque, Max | 28.25 (4) | | | | mNm (oz-in) |
| 7 | Rotor Inertia | 95 (0.52) | | | | $gcm^2$ (oz-in-$s^2$) |
| 8 | Step Angle | 15.0 | | | | Degree |
| 9 | Absolute accuracy 2 ph. On, Full step | ±1 | | | | Degree |
| 10 | Steps per Revolution | 24 | | | | |
| 11 | Ambient Temp Range (operating) | -20 TO 70 (-4 TO 158) | | | | °C (°F) |
| 12 | Maximum Coil Temperature | 130 (266) | | | | °C (°F) |
| 13 | Bearing Type | Sintered Bronze Sleeve | | | | |
| 14 | Insulation Resistance at 500 VDC | 100 | | | | Mohms |
| 15 | Dielectric Withstanding Voltage | 650 VRMS for 2 seconds | | | | VAC |
| 16 | Weight | 440 (15.5) | | | | g (oz) |
| 17 | Leadwire | AWG#24, UL 1430 (105°, 300V) | | | | |
| All Motor Data Values at 20°C Unless Otherwise Specified | | | | | | |

* Energize at Rated Current, 2 Phase On

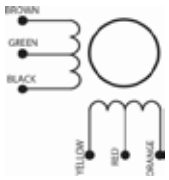


UNIPOLAR COIL

| YELLOW | ORANGE | BROWN | BLACK | RED/GREEN |
|---|---|---|---|---|
| + | - | + | - | + |
| + | - | - | + | + |
| - | + | - | + | + |
| - | + | + | - | + |
| + | - | + | - | + |

CW CCW

VIEWED FROM OUTPUT SHAFT

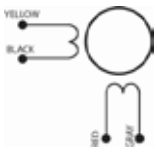


BIPOLAR COIL

| RED | GRAY | YELLOW | BLACK |
|---|---|---|---|
| + | - | + | - |
| + | - | - | + |
| - | + | - | + |
| - | + | + | - |
| + | - | + | - |

CW CCW

VIEWED FROM OUTPUT SHAFT

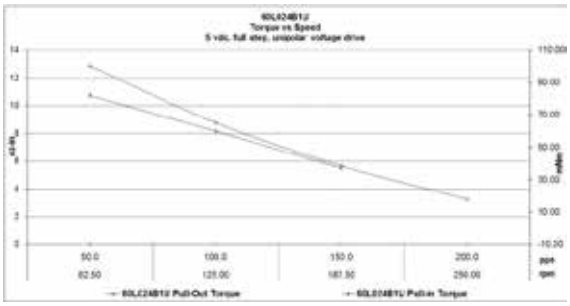

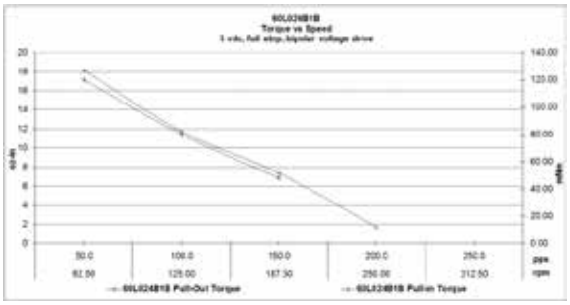

V121616

## 60L048B

RoHS Compliant

Ø60mm 215.4 mNm

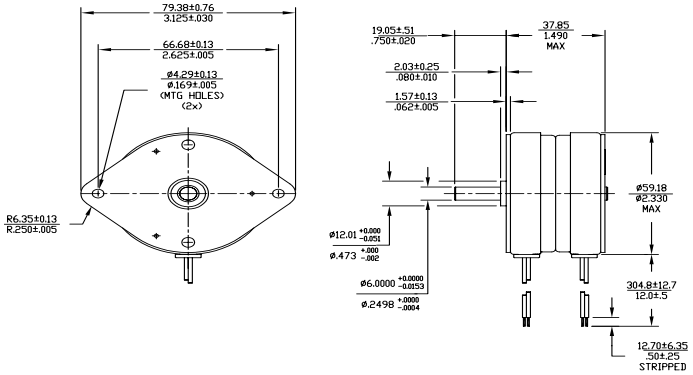


Dimensions in mm

### 60L048B

| Electrical Data | | 60L048B1U Unipolar | 60L048B2U Unipolar | 60L048B1B Bipolar | 60L048B2B Bipolar | |
|---|---|---|---|---|---|---|
| 1 | Operating Voltage | 5 | 12 | 5 | 12 | VDC |
| 2 | Resistance per Phase, ± 10% | 4.6 | 26.2 | 4.6 | 26.2 | Ohms |
| 3 | Inductance per Phase, typ | 6.4 | 33.0 | 12.0 | 68.6 | mH |
| 4 | Rated Current per Phase * | 1.10 | 0.46 | 1.10 | 0.46 | A |
| **Coil independent parameters** | | | | | | |
| 5 | Holding Torque, MIN * | 183.6 (26) | 183.6 (26) | 215.38 (30.5) | 215.38 (30.5) | mNm (oz-in) |
| 6 | Detent Torque, Max | 28.25 (4) | | | | mNm (oz-in) |
| 7 | Rotor Inertia | 95 (0.52) | | | | $gcm^2$ ($oz\text{-}in\text{-}s^2$) |
| 8 | Step Angle | 7.5 | | | | Degree |
| 9 | Absolute accuracy 2 ph. On, Full step | ±0.5 | | | | Degree |
| 10 | Steps per Revolution | 48 | | | | |
| 11 | Ambient Temp Range (operating) | 0 TO 60 (32 TO 140) | | | | °C (°F) |
| 12 | Maximum Coil Temperature | 130 (266) | | | | °C (°F) |
| 13 | Bearing Type | Sintered Bronze Sleeve | | | | |
| 14 | Insulation Resistance at 500 VDC | 100 | | | | Mohms |
| 15 | Dielectric Withstanding Voltage | 650 VRMS for 2 seconds | | | | VAC |
| 16 | Weight | 478 (16.8) | | | | g (oz) |
| 17 | Leadwire | AWG #24, UL 1430 (105°C,600V) | | | | |
| All Motor Data Values at 20°C Unless Otherwise Specified | | | | | | |

* Energize at Rated Current, 2 Phase On

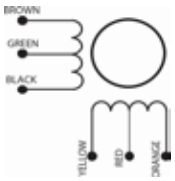


UNIPOLAR COIL

| YELLOW | ORANGE | BROWN | BLACK | RED/GREEN |
|---|---|---|---|---|
| + | - | + | - | + |
| + | - | - | + | + |
| - | + | - | + | + |
| - | + | + | - | + |
| + | - | + | - | + |

CW ↓ ↑ CCW

VIEWED FROM OUTPUT SHAFT

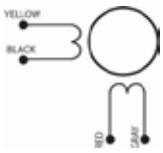


BIPOLAR COIL

| RED | GRAY | YELLOW | BLACK |
|---|---|---|---|
| + | - | + | - |
| + | - | - | + |
| - | + | - | + |
| - | + | + | - |
| + | - | + | - |

CW ↓ ↑ CCW

VIEWED FROM OUTPUT SHAFT

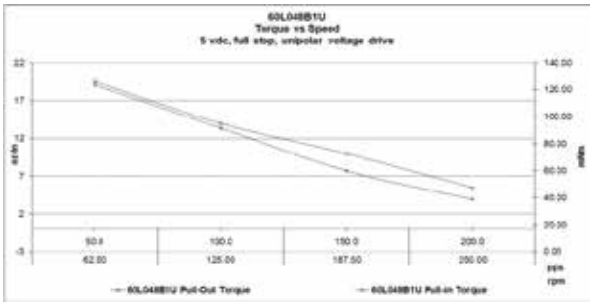


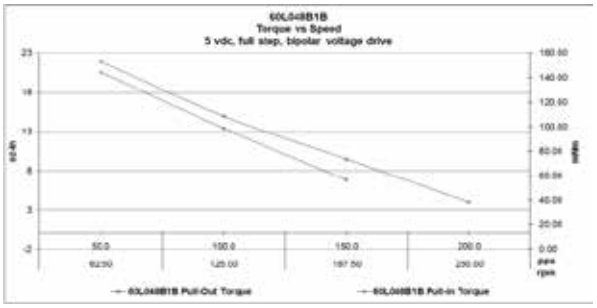


V121616

# 60L048C

RoHS Compliant

Ø60mm 300 mNm

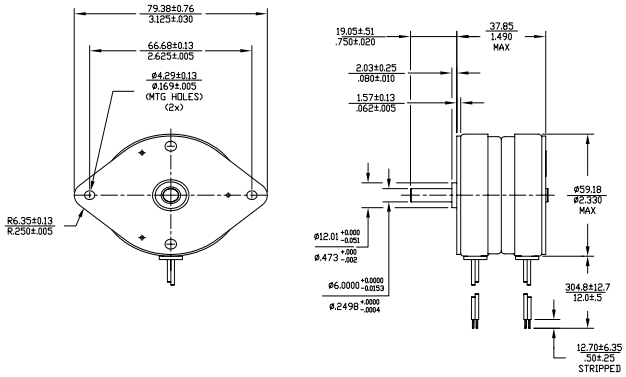


Dimensions in mm

## 60L048C

| Electrical Data | | 60L048C1U Unipolar | 60L048C2U Unipolar | 60L048C1B Bipolar | 60L048C2B Bipolar | |
|---|---|---|---|---|---|---|
| 1 | Operating Voltage | 5 | 12 | 5 | 12 | VDC |
| 2 | Resistance per Phase, ± 10% | 4.6 | 26.2 | 4.6 | 26.2 | Ohms |
| 3 | Inductance per Phase, typ | 5.8 | 41.2 | 16.0 | 79.0 | mH |
| 4 | Rated Current per Phase * | 1.10 | 0.46 | 1.10 | 0.46 | A |
| **Coil independent parameters** | | | | | | |
| 5 | Holding Torque, MIN * | 251.39 (35.6) | 251.39 (35.6) | 300.11 (42.5) | 300.11 (42.5) | mNm (oz-in) |
| 6 | Detent Torque, Max | 35.31 (5) | | | | mNm (oz-in) |
| 7 | Rotor Inertia | 95 (0.52) | | | | $gcm^2$ (oz-in-$s^2$) |
| 8 | Step Angle | 7.5 | | | | Degree |
| 9 | Absolute accuracy 2 ph. On, Full step | ±0.5 | | | | Degree |
| 10 | Steps per Revolution | 48 | | | | |
| 11 | Ambient Temp Range (operating) | 0 TO 60 (32 TO 140) | | | | °C (°F) |
| 12 | Maximum Coil Temperature | 130 (266) | | | | °C (°F) |
| 13 | Bearing Type | Sintered Bronze Sleeve | | | | |
| 14 | Insulation Resistance at 500 VDC | 100 | | | | Mohms |
| 15 | Dielectric Withstanding Voltage | 650 VRMS for 2 seconds | | | | VAC |
| 16 | Weight | 478 (16.8) | | | | g (oz) |
| 17 | Leadwire | AWG #24, UL 1430 (105°C,600V) | | | | |
| All Motor Data Values at 20°C Unless Otherwise Specified | | | | | | |

* Energize at Rated Current, 2 Phase On

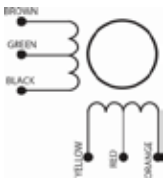


UNIPOLAR COIL

| YELLOW | ORANGE | BROWN | BLACK | RED/GREEN |
|---|---|---|---|---|
| + | - | + | - | + |
| + | - | - | + | + |
| - | + | - | + | + |
| - | + | + | - | + |
| + | - | + | - | + |

CW ↓ ↑ CCW

VIEWED FROM OUTPUT SHAFT

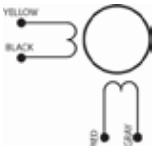


BIPOLAR COIL

| RED | GRAY | YELLOW | BLACK |
|---|---|---|---|
| + | - | + | - |
| + | - | - | + |
| - | + | - | + |
| - | + | + | - |
| + | - | + | - |

CW ↓ ↑ CCW

VIEWED FROM OUTPUT SHAFT

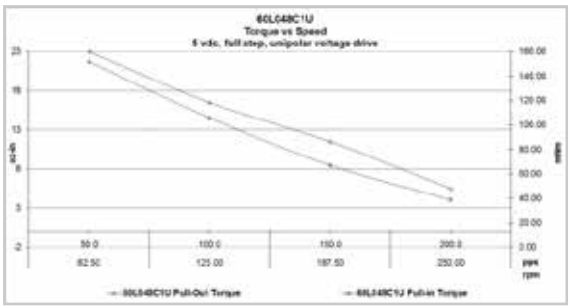


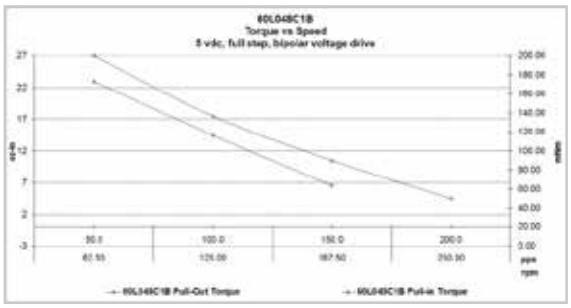


V121616

# Can Stack Linear Actuators

Provide high linear force and accurate positioning in a small package. Our can stack linear actuators combine a 7.5 or 15 degree stepping can stack motor with an integrated lead screw. By eliminating the need for external gears, belts or separate threaded shafts, these compact linear actuators help lower total costs while increasing the performance and reliability of your machine.

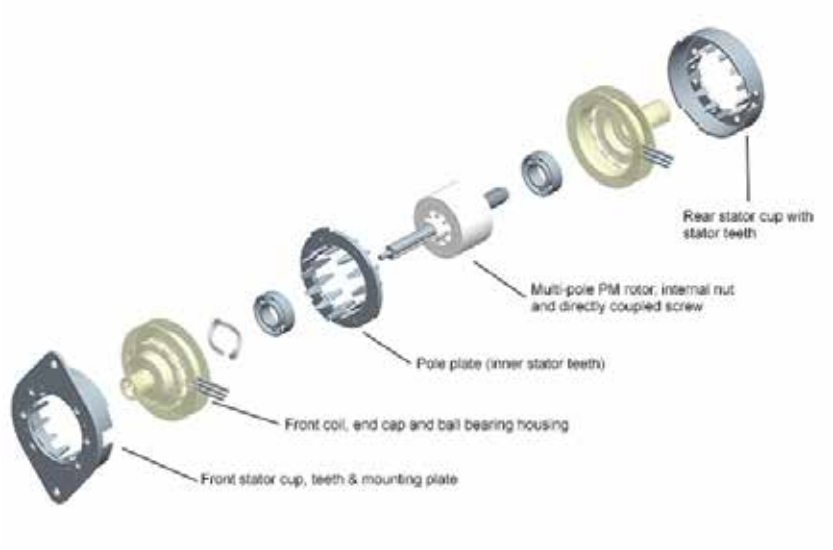


## Powerful, Self-Contained Linear Motion

| Feature | Details | Application Advantages |
|---|---|---|
| **Can stack design with built-in lead screw** | • No need for separate transmission components<br>• Reversible<br>• Unipolar or bipolar windings | • Compact, cost-effective control of linear positioning and velocity<br>• Simpler, more reliable machine design<br>• High linear power in compact package<br>• Less maintenance |
| **Operation in single step, half step or microstepping modes** | • Open-loop, digitally controlled positioning<br>• No need for feedback devices such as encoders | • Reduced machine cost and complexity<br>• Precise resolution to suit almost any application<br>• Quiet operation |
| **Captive and non-captive actuator designs** | • Choice of rotating screw or pure linear motion via grooved shaft<br>• Tip of actuator threaded to accept adapters or direct connection to load | • Adaptable to application requirements<br>• Anti-rotation can be part of machine design, or integrated with the actuator |
| **Brushless commutation** | • No brushes to wear out or replace | • Long life with minimal maintenance<br>• Quiet operation |
| **Ball bearings** | • Long bearing life<br>• Dependable performance in wide range of operating conditions | • Reliable, low-maintenance operation for any application |

## Linear Motion Simplified

### Medical devices & clinical diagnostics
- Infusion systems
- Diagnostic analyzers
- Medical analyzers
- Pipettes
- Sample preparation workstations
- Dosing and dispensing systems

### Instrumentation
- Land surveying
- Microscopes

### Other
- Stage lighting
- Valve actuation
- Security & access

## Meet your Application's Working Point Requirements

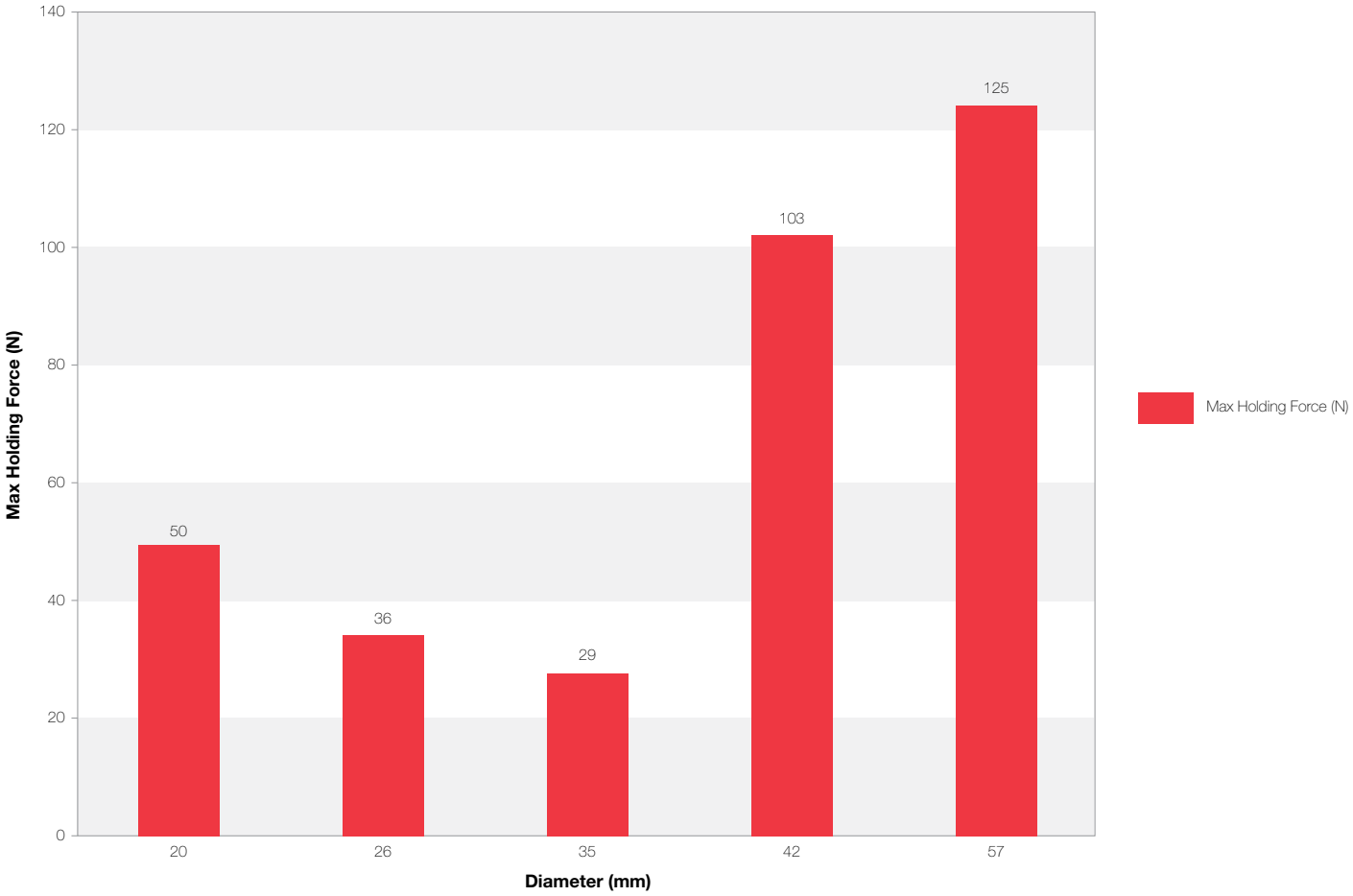


For complete product and application details, visit
**portescap.com/linear-actuators**

## 20DAM-K

RoHS Compliant | Ø20mm | 30.6 N

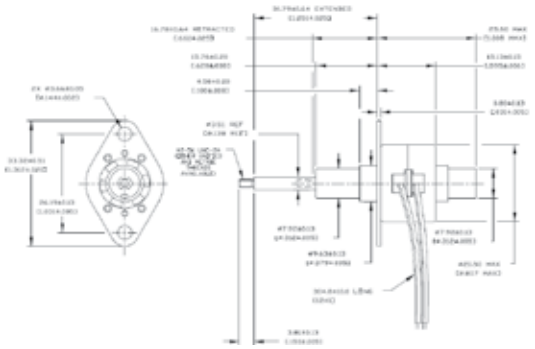

Dimensions in mm

### 20DAM-K

| Electrical Data | | 20DAMXXD1B-K Bipolar | 20DAMXXD2B-K Bipolar | 20DAMXXD1U-K Unipolar | 20DAMXXD2U-K Unipolar | |
|---|---|---|---|---|---|---|
| 1 Operating Voltage # | | 5 | 12 | 5 | 12 | VDC |
| 2 Resistance per Phase, ± 10% | | 20.0 | 115.2 | 20.0 | 115.2 | Ohms |
| 3 Inductance per Phase, typ | | 7.2 | 40.8 | 3.8 | 20.3 | mH |
| 4 Rated Current per Phase, 1 Phase ON | | 0.35 | 0.14 | 0.35 | 0.14 | A |
| 5 Input Power | | 2.5 | 2.5 | 2.5 | 2.5 | W |
| **Coil independent parameters** | **XX Linear travel per step** | | | | | |
| 6 Min. Holding Force @ rated current | 10 @ .001" (0.0254mm) | 30.6 (110) | | 20.9 (75) | | N (oz) |
| | 20 @ .002" (0.0508mm) | 20.9 (75) | | 13.9 (50) | | N (oz) |
| | 40 @ .004" (0.1016mm) | 11.1 (40) | | 8.3 (30) | | N (oz) |
| 7 Min. Holding Force (Unenergized) | 10 @ .001" (0.0254mm) | 20.9 (75) | | | | N (oz) |
| | 20 @ .002" (0.0508mm) | 11.1 (40) | | | | N (oz) |
| | 40 @ .004" (0.1016mm) | 2.8 (10) | | | | N (oz) |
| 8 Stroke Length, Typ | | 15 (0.59) | | | | mm (in) |
| 9 Linear Travel Accuracy | | ± 1 Step | | | | |
| 10 Steps per Revolution | | 24 | | | | |
| 11 Ambient Temperature Range (operating) | | -20 to +70 (-4 to +158) | | | | ℃ (℉) |
| 12 Maximum Coil Temperature | | 130 (266) | | | | ℃ (℉) |
| 13 Bearing Type | | Ball Bearing | | | | |
| 14 Insulation Resistance at 500 VDC | | 20 | | | | Mohms |
| 15 Dielectric Withstanding Voltage | | 650 for 2 seconds | | | | VAC |
| 16 Weight | | 25 (0.88) | | | | g (oz) |
| 17 Leadwire | | AWG #28, UL1429 (80° C, 150 V) | | | | |
| All Motor Data Values at 20℃ Unless Otherwise Specified | | # Voltage in case of voltage driver (indicator of R*I) | | | | |

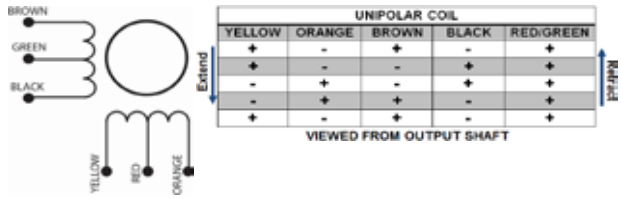


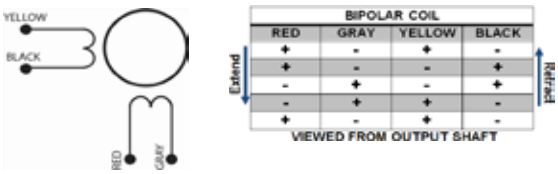


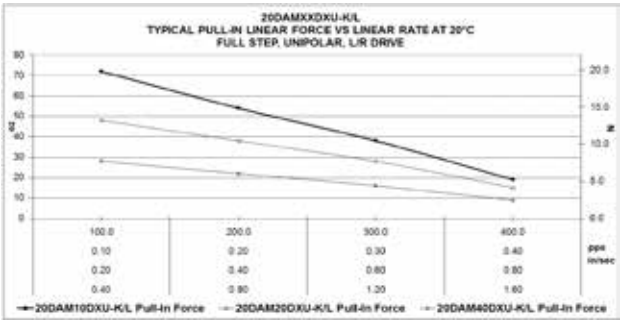


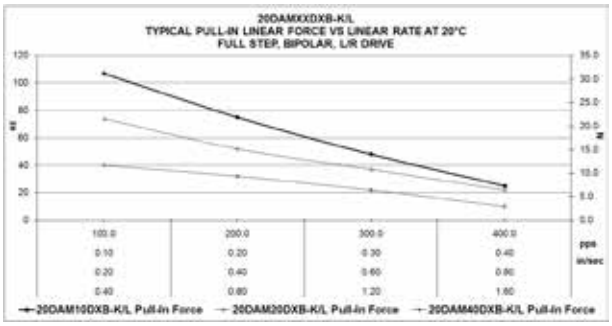


V121616

## 20DAM-L

RoHS Compliant | Ø20mm | 30.6 N

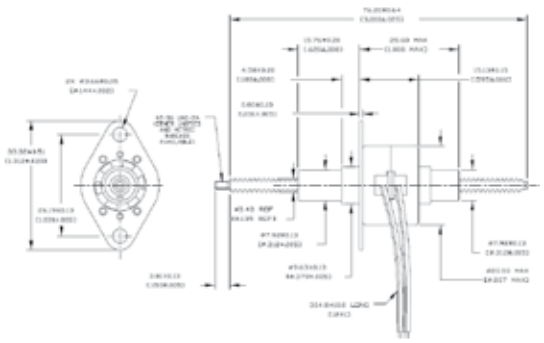

Dimensions in mm

### 20DAM-L

| Electrical Data | | | 20DAMXXD1B-L Bipolar | 20DAMXXD2B-L Bipolar | 20DAMXXD1U-L Unipolar | 20DAMXXD2U-L Unipolar | |
|---|---|---|---|---|---|---|---|
| 1 | Operating Voltage # | | 5 | 12 | 5 | 12 | VDC |
| 2 | Resistance per Phase, ± 10% | | 20.0 | 115.2 | 20.0 | 115.2 | Ohms |
| 3 | Inductance per Phase, typ | | 7.2 | 40.8 | 3.8 | 20.3 | mH |
| 4 | Rated Current per Phase, 1 Phase ON | | 0.35 | 0.14 | 0.35 | 0.14 | A |
| 5 | Input Power | | 2.5 | 2.5 | 2.5 | 2.5 | W |
| **Coil independent parameters** | | **XX Linear travel per step** | | | | | |
| 6 | Min. Holding Force @ rated current | 10 @ .001" (0.0254mm) | 30.6 (110) | | 20.9 (75) | | N (oz) |
| | | 20 @ .002" (0.0508mm) | 20.9 (75) | | 13.9 (50) | | N (oz) |
| | | 40 @ .004" (0.1016mm) | 11.1 (40) | | 8.3 (30) | | N (oz) |
| 7 | Min. Holding Force (Unenergized) | 10 @ .001" (0.0254mm) | 20.9 (75) | | | | N (oz) |
| | | 20 @ .002" (0.0508mm) | 11.1 (40) | | | | N (oz) |
| | | 40 @ .004" (0.1016mm) | 2.8 (10) | | | | N (oz) |
| 8 | Stroke Length, Typ | | 50 (1.97) | | | | mm (in) |
| 9 | Linear Travel Accuracy | | ± 1 Step | | | | |
| 10 | Steps per Revolution | | 24 | | | | |
| 11 | Ambient Temperature Range (operating) | | -20 to +70 (-4 to +158) | | | | °C (°F) |
| 12 | Maximum Coil Temperature | | 130 (266) | | | | °C (°F) |
| 13 | Bearing Type | | Ball Bearing | | | | |
| 14 | Insulation Resistance at 500 VDC | | 20 | | | | Mohms |
| 15 | Dielectric Withstanding Voltage | | 650 for 2 seconds | | | | VAC |
| 16 | Weight | | 25 (0.88) | | | | g (oz) |
| 17 | Leadwire | | AWG #28, UL1429 (80° C, 150 V) | | | | |
| All Motor Data Values at 20°C Unless Otherwise Specified | | | # Voltage in case of voltage driver (indicator of R*I) | | | | |


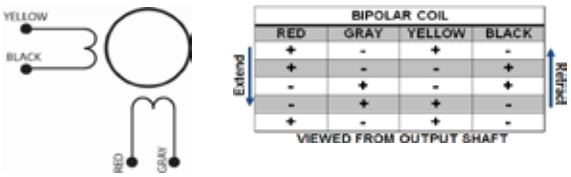


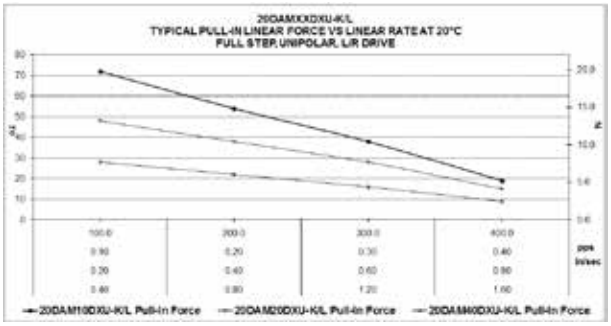


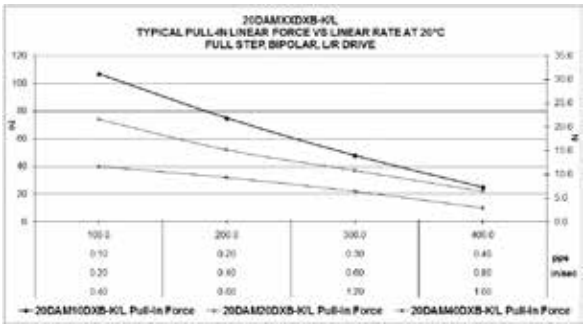


V121616

## 20DBM-K

RoHS Compliant | Ø20mm | 50 N

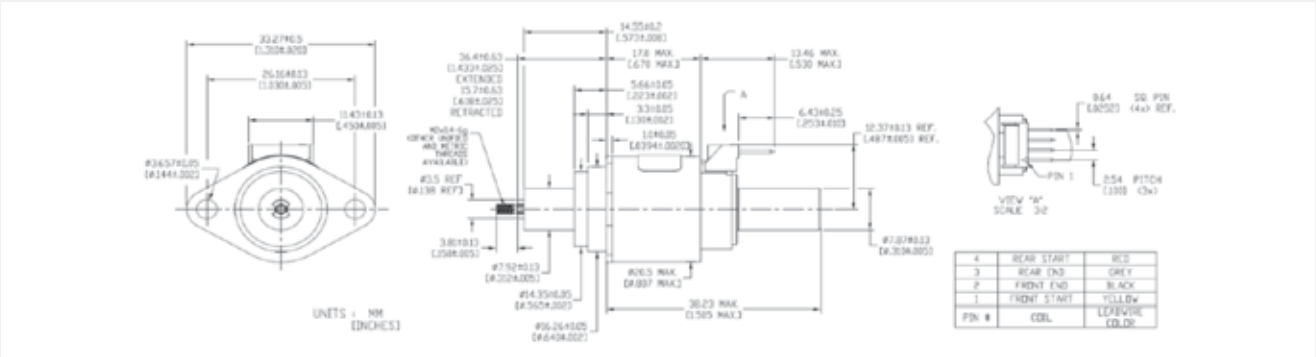


Dimensions in mm

### 20DBM-K

| Electrical Data | | | 20DBMXXD2B-K Bipolar | 20DBMXXD1B-K Bipolar | 20DBMXXD3B-K Bipolar | 20DBMXXD4B-K Bipolar | |
|---|---|---|---|---|---|---|---|
| 1 | Operating Voltage # | | 12 | 5 | 2.9 | 1.4 | VDC |
| 2 | Resistance per Phase, ± 10% | | 100.5 | 17.5 | 5.7 | 1.4 | Ohms |
| 3 | Inductance per Phase, typ | | 45.0 | 7.0 | 2.4 | 0.6 | mH |
| 4 | Rated Current per Phase, 1 Phase ON | | 0.17 | 0.41 | 0.71 | 1.41 | A |
| 5 | Input Power | | 2.9 | 2.9 | 2.9 | 2.9 | W |
| **Coil independent parameters** | | **XX** | **Linear travel per step** | | | | |
| 6 | Min. Holding Force @ rated current | 05 | @ .0005" (0.0127mm) | 50 (180) | | | N (oz) |
| | | 10 | @ .001" (0.0254mm) | 35 (126) | | | N (oz) |
| | | 20 | @ .002" (0.0508mm) | 22 (79) | | | N (oz) |
| 7 | Min. Holding Force (Unenergized) | 05 | @ .0005" (0.0127mm) | 50 (180) | | | N (oz) |
| | | 10 | @ .001" (0.0254mm) | 13.9 (50) | | | N (oz) |
| | | 20 | @ .002" (0.0508mm) | 5.5 (20) | | | N (oz) |
| 8 | Stroke Length, Typ | | | 20 (0.79) | | | mm (in) |
| 9 | Linear Travel Accuracy | | | ± 1 Step | | | |
| 10 | Steps per Revolution | | | 48 | | | |
| 11 | Ambient Temperature Range (operating) | | | -20 to +70 (-4 to +158) | | | ℃ (℉) |
| 12 | Maximum Coil Temperature | | | 130 (266) | | | ℃ (℉) |
| 13 | Bearing Type | | | Ball Bearing | | | |
| 14 | Insulation Resistance at 500 VDC | | | 20 | | | Mohms |
| 15 | Dielectric Withstanding Voltage | | | 650 for 2 seconds | | | VAC |
| 16 | Weight | | | 35 (1.23) | | | g (oz) |
| 17 | Leadwire | | | | | | |

All Motor Data Values at 20℃ Unless Otherwise Specified

# Voltage in case of voltage driver (indicator of R*I)

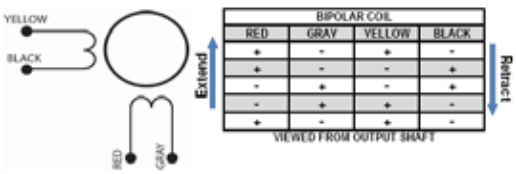


| BIPOLAR COIL | | | |
|---|---|---|---|
| RED | GRAY | YELLOW | BLACK |
| + | - | + | - |
| + | - | - | + |
| - | + | - | + |
| - | + | + | - |
| + | - | + | - |

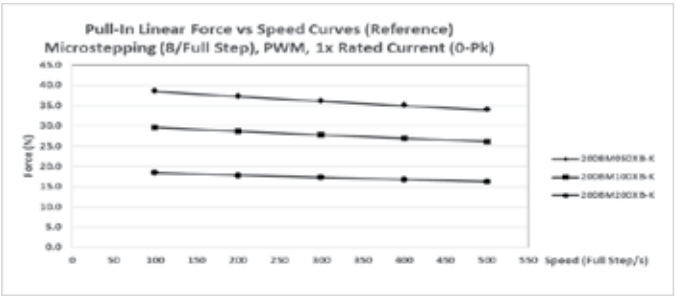


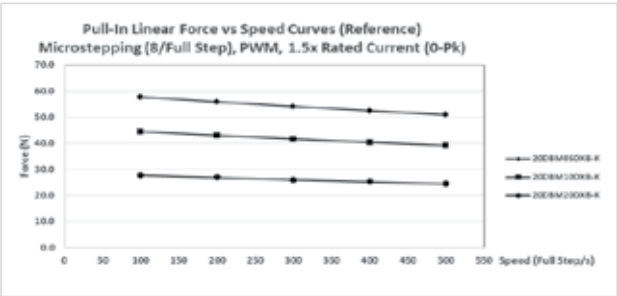


Curves created with a 5 Volt motor and a 24 Volt power supply.

V121616

## 20DBM-L

RoHS Compliant | Ø20mm | 50 N

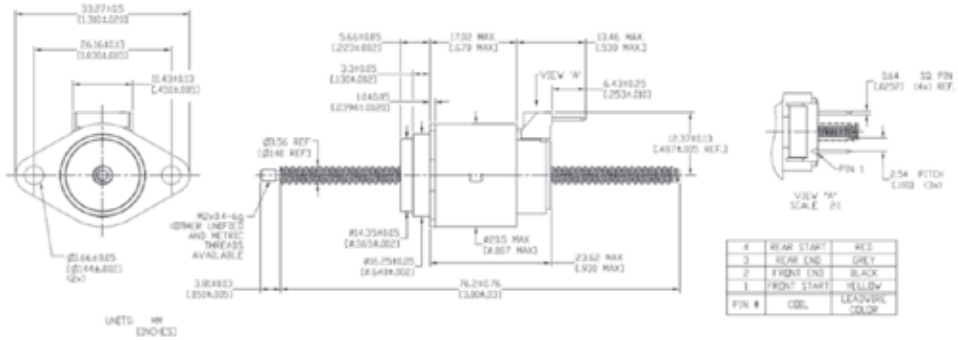

Dimensions in mm

### 20DBM-L

| Electrical Data | | 20DBMXXD2B-L Bipolar | 20DBMXXD1B-L Bipolar | 20DBMXXD3B-L Bipolar | 20DBMXXD4B-L Bipolar | |
|---|---|---|---|---|---|---|
| 1 Operating Voltage # | | 12 | 5 | 2.9 | 1.4 | VDC |
| 2 Resistance per Phase, ± 10% | | 100.5 | 17.5 | 5.7 | 1.4 | Ohms |
| 3 Inductance per Phase, typ | | 45.0 | 7.0 | 2.4 | 0.6 | mH |
| 4 Rated Current per Phase, 1 Phase ON | | 0.17 | 0.41 | 0.71 | 1.41 | A |
| 5 Input Power | | 2.9 | 2.9 | 2.9 | 2.9 | W |
| **Coil independent parameters** | **XX Linear travel per step** | | | | | |
| 6 Min. Holding Force @ rated current | 05 @ .0005" (0.0127mm) | 50 (180) | | | | N (oz) |
| | 10 @ .001" (0.0254mm) | 35 (126) | | | | N (oz) |
| | 20 @ .002" (0.0508mm) | 22 (79) | | | | N (oz) |
| 7 Min. Holding Force (Unenergized) | 05 @ .0005" (0.0127mm) | 50 (180) | | | | N (oz) |
| | 10 @ .001" (0.0254mm) | 13.9 (50) | | | | N (oz) |
| | 20 @ .002" (0.0508mm) | 5.5 (20) | | | | N (oz) |
| 8 Stroke Length, Typ | | 50 (1.97) | | | | mm (in) |
| 9 Linear Travel Accuracy | | ± 1 Step | | | | |
| 10 Steps per Revolution | | 48 | | | | |
| 11 Ambient Temperature Range (operating) | | -20 to +70 (-4 to +158) | | | | ℃ (℉) |
| 12 Maximum Coil Temperature | | 130 (266) | | | | ℃ (℉) |
| 13 Bearing Type | | Ball Bearing | | | | |
| 14 Insulation Resistance at 500 VDC | | 20 | | | | Mohms |
| 15 Dielectric Withstanding Voltage | | 650 for 2 seconds | | | | VAC |
| 16 Weight | | 35 (1.23) | | | | g (oz) |
| 17 Leadwire | | | | | | |

All Motor Data Values at 20℃ Unless Otherwise Specified

# Voltage in case of voltage driver (indicator of R*I)

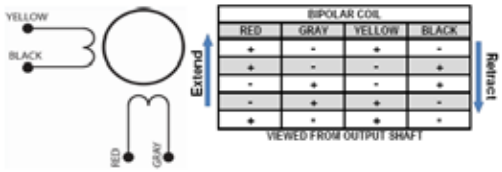


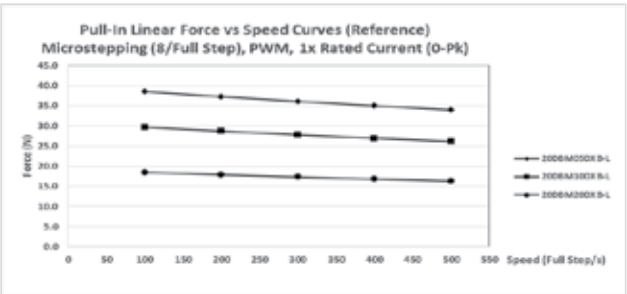


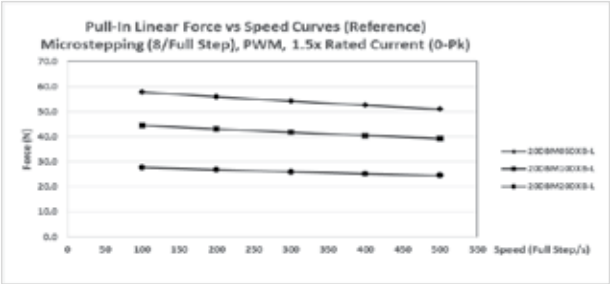


Curves created with a 5 Volt motor and a 24 Volt power supply.

V121616

## 26DAM-K

RoHS Compliant | Ø26mm | 33.4 N

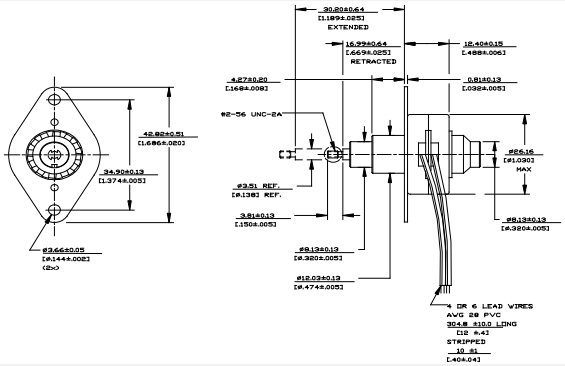

Dimensions in mm

### 26DAM-K

| Electrical Data | | | 26DAMXXD1B-K Bipolar | 26DAMXXD2B-K Bipolar | 26DAMXXD1U-K Unipolar | 26DAMXXD2U-K Unipolar | |
|---|---|---|---|---|---|---|---|
| 1 Operating Voltage # | | | 5 | 12 | 5 | 12 | VDC |
| 2 Resistance per Phase, ± 10% | | | 14.6 | 84.0 | 14.6 | 84.0 | Ohms |
| 3 Inductance per Phase, typ | | | 6.5 | 33.6 | 3.8 | 20.5 | mH |
| 4 Rated Current per Phase, 1 Phase ON | | | 0.48 | 0.20 | 0.48 | 0.20 | A |
| 5 Input Power | | | 3.4 | 3.4 | 3.4 | 3.4 | W |
| **Coil independent parameters** | **XX** | **Linear travel per step** | | | | | |
| 6 Min. Holding Force @ rated current | 10 | @ .001" (0.0254mm) | 33.4 (120) | | 20 (72) | | N (oz) |
| | 20 | @ .002" (0.0508mm) | 25 (90) | | 15.3 (55) | | N (oz) |
| | 40 | @ .004" (0.1016mm) | 14.5 (52) | | 8.9 (32) | | N (oz) |
| 7 Min. Holding Force (Unenergized) | 10 | @ .001" (0.0254mm) | 20 (72) | | | | N (oz) |
| | 20 | @ .002" (0.0508mm) | 13.9 (50) | | | | N (oz) |
| | 40 | @ .004" (0.1016mm) | 5.56 (20) | | | | N (oz) |
| 8 Stroke Length, Typ | | | 13.2 (0.52) | | | | mm (in) |
| 9 Linear Travel Accuracy | | | ± 1 Step | | | | |
| 10 Steps per Revolution | | | 24 | | | | |
| 11 Ambient Temperature Range (operating) | | | -20 to +70 (-4 to +158) | | | | ℃ (℉) |
| 12 Maximum Coil Temperature | | | 130 (266) | | | | ℃ (℉) |
| 13 Bearing Type | | | Ball Bearing | | | | |
| 14 Insulation Resistance at 500 VDC | | | 20 | | | | Mohms |
| 15 Dielectric Withstanding Voltage | | | 650 for 2 seconds | | | | VAC |
| 16 Weight | | | 34 (1.2) | | | | g (oz) |
| 17 Leadwire | | | AWG #28, UL1429 (80°C, 150 V) | | | | |
| All Motor Data Values at 20℃ Unless Otherwise Specified | | | # Voltage in case of voltage driver (indicator of R*I) | | | | |

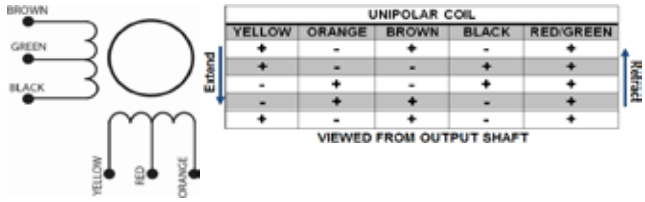


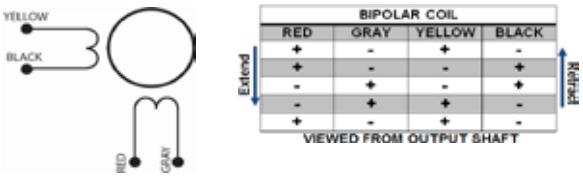


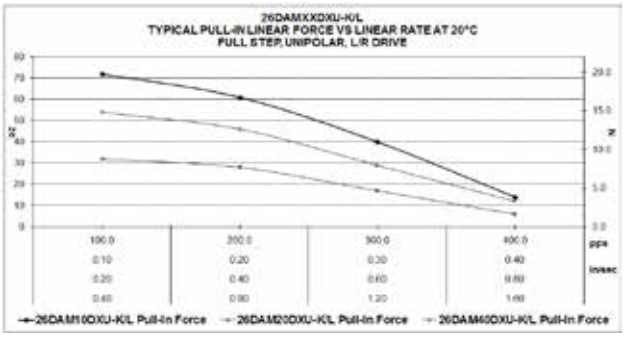


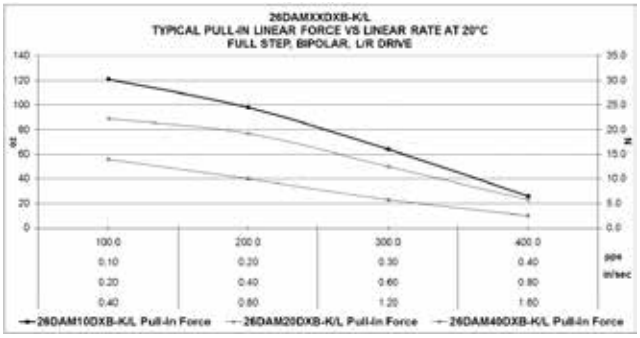


V121616

## 26DAM-L

RoHS Compliant | Ø26mm | 33.4 N

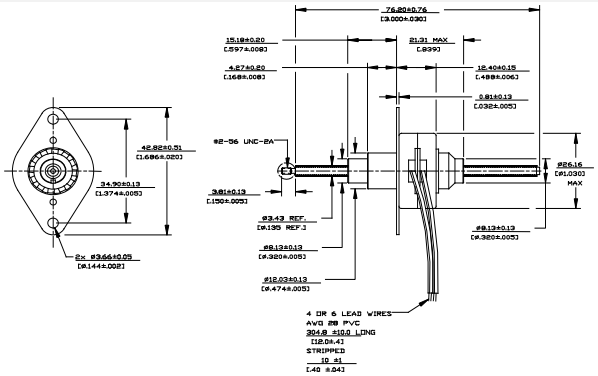

Dimensions in mm

## 26DAM-L

| Electrical Data | | 26DAMXXD1B-L Bipolar | 26DAMXXD2B-L Bipolar | 26DAMXXD1U-L Unipolar | 26DAMXXD2U-L Unipolar | |
|---|---|---|---|---|---|---|
| 1 Operating Voltage # | | 5 | 12 | 5 | 12 | VDC |
| 2 Resistance per Phase, ± 10% | | 14.6 | 84.0 | 14.6 | 84.0 | Ohms |
| 3 Inductance per Phase, typ | | 6.5 | 33.6 | 3.8 | 20.5 | mH |
| 4 Rated Current per Phase, 1 Phase ON | | 0.48 | 0.20 | 0.48 | 0.20 | A |
| 5 Input Power | | 3.4 | 3.4 | 3.4 | 3.4 | W |
| **Coil independent parameters** | **XX Linear travel per step** | | | | | |
| 6 Min. Holding Force @ rated current | 10 @ .001" (0.0254mm) | 33.4 (120) | | 20 (72) | | N (oz) |
| | 20 @ .002" (0.0508mm) | 25 (90) | | 15.3 (55) | | N (oz) |
| | 40 @ .004" (0.1016mm) | 14.5 (52) | | 8.9 (32) | | N (oz) |
| 7 Min. Holding Force (Unenergized) | 10 @ .001" (0.0254mm) | 20 (72) | | | | N (oz) |
| | 20 @ .002" (0.0508mm) | 13.9 (50) | | | | N (oz) |
| | 40 @ .004" (0.1016mm) | 5.56 (20) | | | | N (oz) |
| 8 Stroke Length, Typ | | 48 (1.89) | | | | mm (in) |
| 9 Linear Travel Accuracy | | ± 1 Step | | | | |
| 10 Steps per Revolution | | 24 | | | | |
| 11 Ambient Temperature Range (operating) | | -20 to +70 (-4 to +158) | | | | °C (°F) |
| 12 Maximum Coil Temperature | | 130 (266) | | | | °C (°F) |
| 13 Bearing Type | | Ball Bearing | | | | |
| 14 Insulation Resistance at 500 VDC | | 20 | | | | Mohms |
| 15 Dielectric Withstanding Voltage | | 650 for 2 seconds | | | | VAC |
| 16 Weight | | 34 (1.2) | | | | g (oz) |
| 17 Leadwire | | AWG #28, UL1429 (80°C, 150 V) | | | | |
| All Motor Data Values at 20°C Unless Otherwise Specified | | # Voltage in case of voltage driver (indicator of R*I) | | | | |

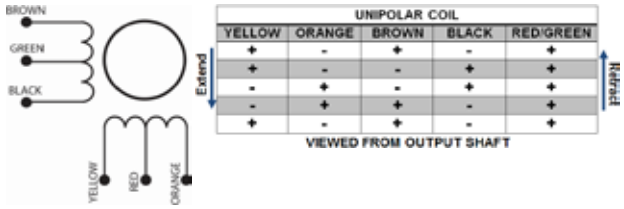


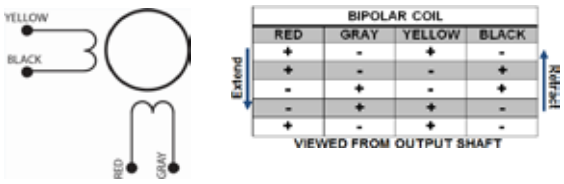


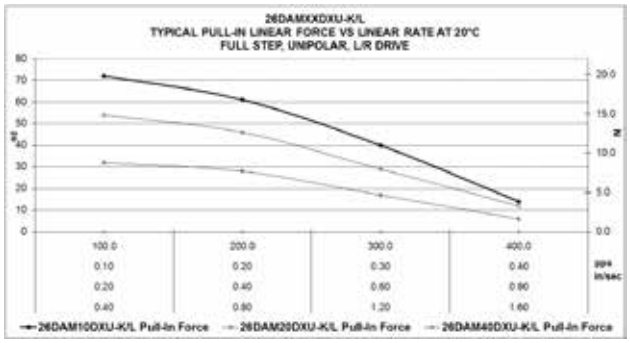


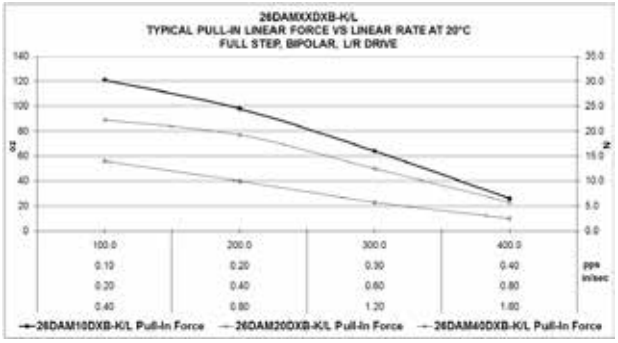


V121616

## 26DBM-K

RoHS Compliant | Ø26mm | 35.6 N

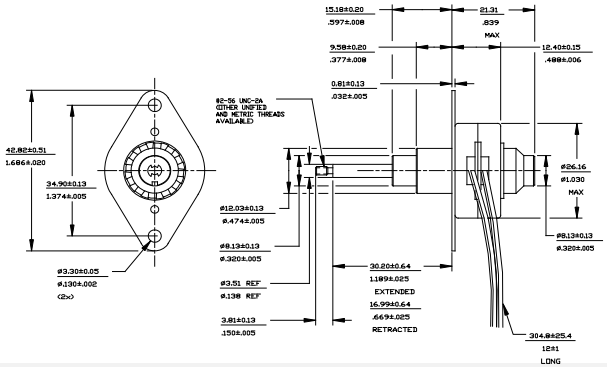


Dimensions in mm

## 26DBM-K

| Electrical Data | | 26DBMXXD1B-K Bipolar | 26DBMXXD2B-K Bipolar | 26DBMXXD1U-K Unipolar | 26DBMXXD2U-K Unipolar | |
|---|---|---|---|---|---|---|
| 1 Operating Voltage # | | 5 | 12 | 5 | 12 | VDC |
| 2 Resistance per Phase, ± 10% | | 14.6 | 84.0 | 14.6 | 84.0 | Ohms |
| 3 Inductance per Phase, typ | | 8.4 | 43.3 | 5.0 | 26.5 | mH |
| 4 Rated Current per Phase, 1 Phase ON | | 0.48 | 0.20 | 0.48 | 0.20 | A |
| 5 Input Power | | 3.4 | 3.4 | 3.4 | 3.4 | W |
| **Coil independent parameters** | **XX Linear travel per step** | | | | | |
| 6 Min. Holding Force @ rated current | 05 @ .0005" (0.0127mm) | 35.6 (128) | | 34.2 (123) | | N (oz) |
| | 10 @ .001" (0.0254mm) | 28.9 (104) | | 28.1 (101) | | N (oz) |
| | 20 @ .002" (0.0508mm) | 19.2 (69) | | 17.8 (64) | | N (oz) |
| 7 Min. Holding Force (Unenergized) | 05 @ .0005" (0.0127mm) | 34.2 (123) | | | | N (oz) |
| | 10 @ .001" (0.0254mm) | 13.9 (50) | | | | N (oz) |
| | 20 @ .002" (0.0508mm) | 5.5 (20) | | | | N (oz) |
| 8 Stroke Length, Typ | | 13.2 (0.52) | | | | mm (in) |
| 9 Linear Travel Accuracy | | ± 1 Step | | | | |
| 10 Steps per Revolution | | 48 | | | | |
| 11 Ambient Temperature Range (operating) | | -20 to +70 (-4 to +158) | | | | ℃ (℉) |
| 12 Maximum Coil Temperature | | 130 (266) | | | | ℃ (℉) |
| 13 Bearing Type | | Ball Bearing | | | | |
| 14 Insulation Resistance at 500 VDC | | 20 | | | | Mohms |
| 15 Dielectric Withstanding Voltage | | 650 for 2 seconds | | | | VAC |
| 16 Weight | | 34 (1.2) | | | | g (oz) |
| 17 Leadwire | | AWG #28, UL1429 (80°C, 150 V) | | | | |
| All Motor Data Values at 20℃ Unless Otherwise Specified | | # Voltage in case of voltage driver (indicator of R*I) | | | | |


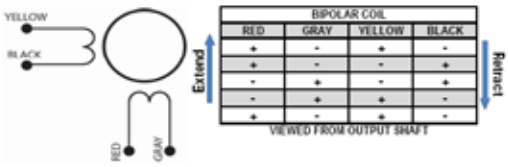


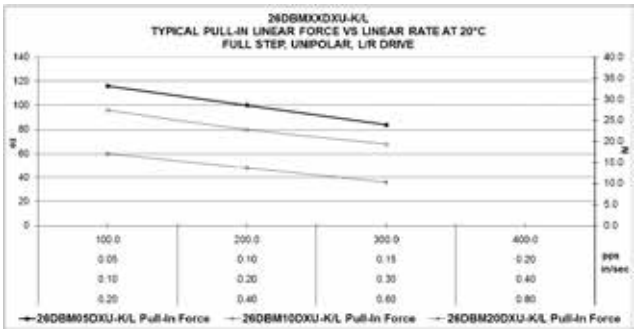


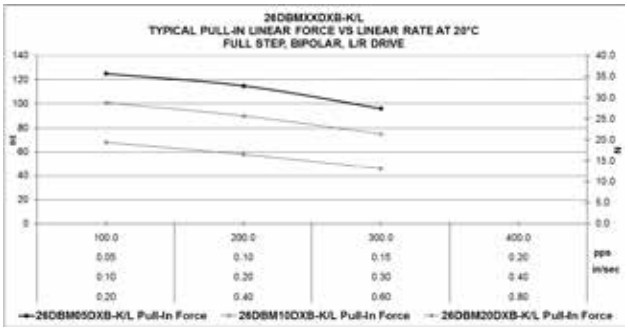


V121616

## 26DBM-L

RoHS Compliant | Ø26mm | 35.6 N

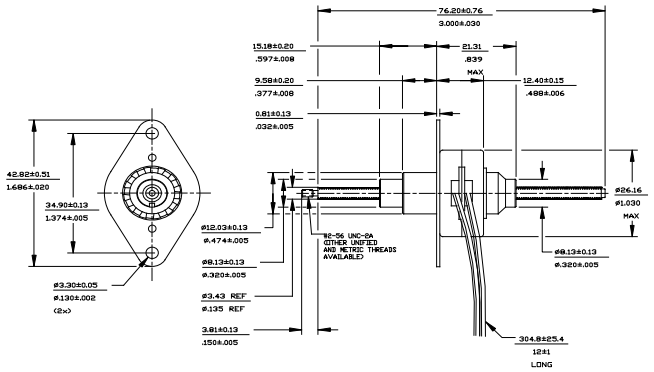


Dimensions in mm

## 26DBM-L

| Electrical Data | | 26DBMXXD1B-L Bipolar | 26DBMXXD2B-L Bipolar | 26DBMXXD1U-L Unipolar | 26DBMXXD2U-L Unipolar | |
|---|---|---|---|---|---|---|
| 1 Operating Voltage # | | 5 | 12 | 5 | 12 | VDC |
| 2 Resistance per Phase, ± 10% | | 14.6 | 84.0 | 14.6 | 84.0 | Ohms |
| 3 Inductance per Phase, typ | | 8.4 | 43.3 | 5.0 | 26.5 | mH |
| 4 Rated Current per Phase, 1 Phase ON | | 0.48 | 0.20 | 0.48 | 0.20 | A |
| 5 Input Power | | 3.4 | 3.4 | 3.4 | 3.4 | W |
| **Coil independent parameters** | **XX Linear travel per step** | | | | | |
| 6 Min. Holding Force @ rated current | 05 @ .0005" (0.0127mm) | 35.6 (128) | | 34.2 (123) | | N (oz) |
| | 10 @ .001" (0.0254mm) | 28.9 (104) | | 28.1 (101) | | N (oz) |
| | 20 @ .002" (0.0508mm) | 19.2 (69) | | 17.8 (64) | | N (oz) |
| 7 Min. Holding Force (Unenergized) | 05 @ .0005" (0.0127mm) | 34.2 (123) | | | | N (oz) |
| | 10 @ .001" (0.0254mm) | 13.9 (50) | | | | N (oz) |
| | 20 @ .002" (0.0508mm) | 5.5 (20) | | | | N (oz) |
| 8 Stroke Length, Typ | | 48 (1.89) | | | | mm (in) |
| 9 Linear Travel Accuracy | | ± 1 Step | | | | |
| 10 Steps per Revolution | | 48 | | | | |
| 11 Ambient Temperature Range (operating) | | -20 to +70 (-4 to +158) | | | | ℃ (℉) |
| 12 Maximum Coil Temperature | | 130 (266) | | | | ℃ (℉) |
| 13 Bearing Type | | Ball Bearing | | | | |
| 14 Insulation Resistance at 500 VDC | | 20 | | | | Mohms |
| 15 Dielectric Withstanding Voltage | | 650 for 2 seconds | | | | VAC |
| 16 Weight | | 34 (1.2) | | | | g (oz) |
| 17 Leadwire | | AWG #28, UL1429 (80° C, 150 V) | | | | |

All Motor Data Values at 20℃ Unless Otherwise Specified

# Voltage in case of voltage driver (indicator of R*I)


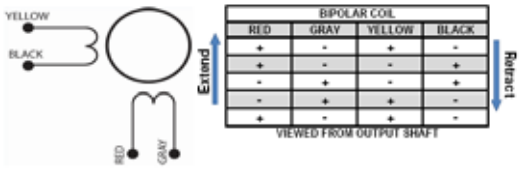


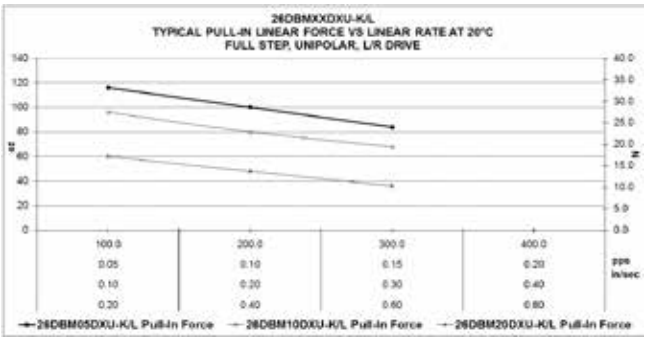


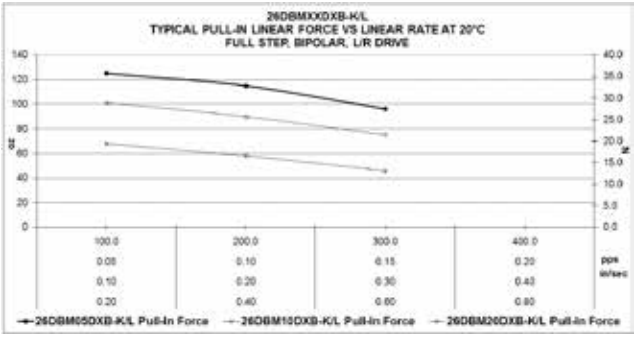


V121616

## 35DBM-K

RoHS Compliant | Ø35mm | 28.9 N

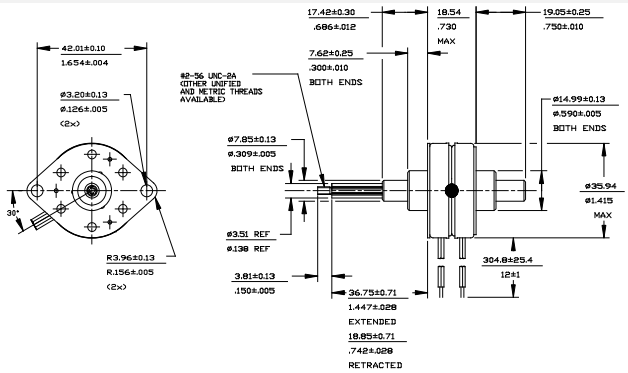


Dimensions in mm

## 35DBM-K

| Electrical Data | | 35DBMXXB1B-K Bipolar | 35DBMXXB2B-K Bipolar | 35DBMXXB1U-K Unipolar | 35DBMXXB2U-K Unipolar | |
|---|---|---|---|---|---|---|
| 1 Operating Voltage # | | 5 | 12 | 5 | 12 | VDC |
| 2 Resistance per Phase, ± 10% | | 10.0 | 58.0 | 10.0 | 58.0 | Ohms |
| 3 Inductance per Phase, typ | | 11.2 | 60.0 | 5.2 | 30.0 | mH |
| 4 Rated Current per Phase, 1 Phase ON | | 0.71 | 0.30 | 0.71 | 0.30 | A |
| 5 Input Power | | 5.0 | 5.0 | 5.0 | 5.0 | W |
| **Coil independent parameters** | **XX Linear travel per step** | | | | | |
| 6 Min. Holding Force @ rated current | 10 @ .001" (0.0254mm) | 28.9 (103.9) | | 20.9 (75) | | N (oz) |
| | 20 @ .002" (0.0508mm) | 23.6 (84.9) | | 15.3 (55) | | N (oz) |
| | 30 @ .003" (0.0762mm) | 13.3 (47.8) | | 8.3 (30) | | N (oz) |
| 7 Min. Holding Force (Unenergized) | 10 @ .001" (0.0254mm) | 11.1 (40) | | | | N (oz) |
| | 20 @ .002" (0.0508mm) | 2.8 (10) | | | | N (oz) |
| | 30 @ .003" (0.0762mm) | 1.4 (5) | | | | N (oz) |
| 8 Stroke Length, Typ | | 17.9 (0.71) | | | | mm (in) |
| 9 Linear Travel Accuracy | | ± 1 Step | | | | |
| 10 Steps per Revolution | | 48 | | | | |
| 11 Ambient Temperature Range (operating) | | -20 to +70 (-4 to +158) | | | | ℃ (℉) |
| 12 Maximum Coil Temperature | | 130 (266) | | | | ℃ (℉) |
| 13 Bearing Type | | Ball Bearing | | | | |
| 14 Insulation Resistance at 500 VDC | | 20 | | | | Mohms |
| 15 Dielectric Withstanding Voltage | | 650 for 2 seconds | | | | VAC |
| 16 Weight | | 85.2 (3) | | | | g (oz) |
| 17 Leadwire | | AWG 26, UL 1429 | | | | |

All Motor Data Values at 20℃ Unless Otherwise Specified

# Voltage in case of voltage driver (indicator of R*I)

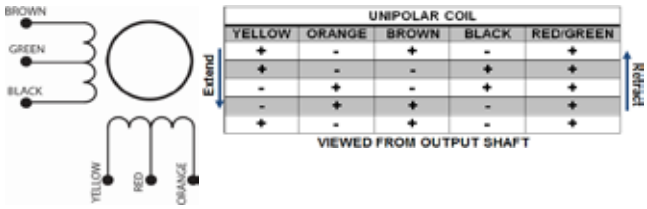


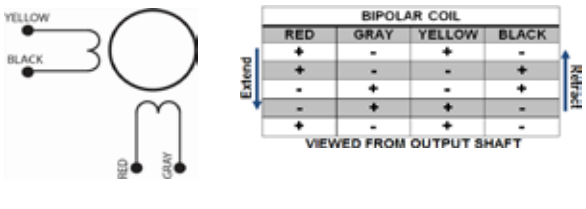


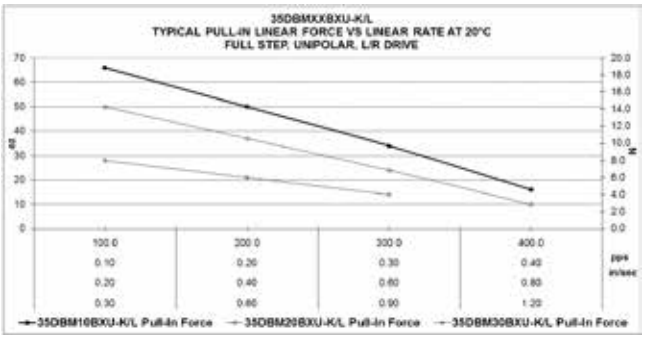


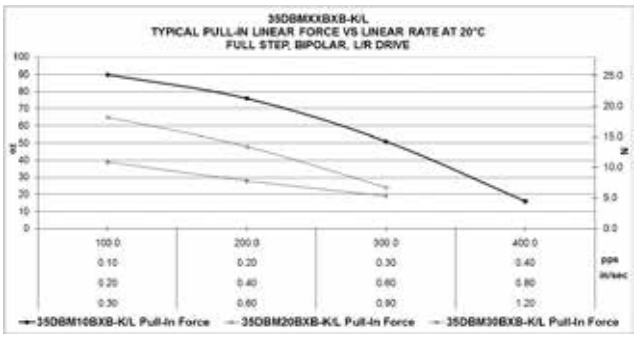


V121616

## 35DBM-L

RoHS Compliant | Ø35mm | 28.9 N

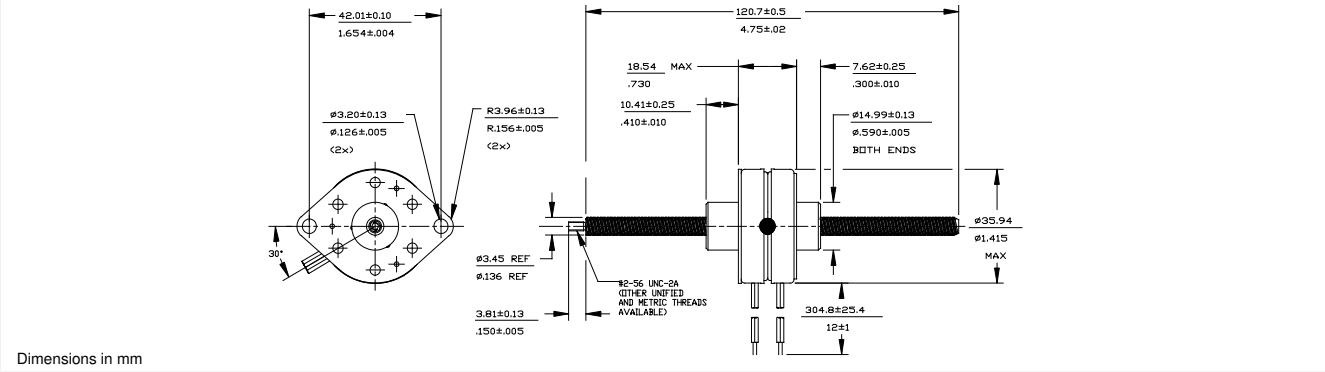


Dimensions in mm

## 35DBM-L

| Electrical Data | | | 35DBMXXB1B-L Bipolar | 35DBMXXB2B-L Bipolar | 35DBMXXB1U-L Unipolar | 35DBMXXB2U-L Unipolar | |
|---|---|---|---|---|---|---|---|
| 1 | Operating Voltage # | | 5 | 12 | 5 | 12 | VDC |
| 2 | Resistance per Phase, ± 10% | | 10.0 | 58.0 | 10.0 | 58.0 | Ohms |
| 3 | Inductance per Phase, typ | | 11.2 | 60.0 | 5.2 | 30.0 | mH |
| 4 | Rated Current per Phase, 1 Phase ON | | 0.71 | 0.30 | 0.71 | 0.30 | A |
| 5 | Input Power | | 5.0 | 5.0 | 5.0 | 5.0 | W |
| **Coil independent parameters** | | **XX Linear travel per step** | | | | | |
| 6 | Min. Holding Force @ rated current | 10 @ .001" (0.0254mm) | 28.9 (103.9) | | 20.9 (75) | | N (oz) |
| | | 20 @ .002" (0.0508mm) | 23.6 (84.9) | | 15.3 (55) | | N (oz) |
| | | 30 @ .003" (0.0762mm) | 13.3 (47.8) | | 8.3 (30) | | N (oz) |
| 7 | Min. Holding Force (Unenergized) | 10 @ .001" (0.0254mm) | 11.1 (40) | | | | N (oz) |
| | | 20 @ .002" (0.0508mm) | 2.8 (10) | | | | N (oz) |
| | | 30 @ .003" (0.0762mm) | 1.4 (5) | | | | N (oz) |
| 8 | Stroke Length, Typ | | 63.5 (2.5) | | | | mm (in) |
| 9 | Linear Travel Accuracy | | ± 1 Step | | | | |
| 10 | Steps per Revolution | | 48 | | | | |
| 11 | Ambient Temperature Range (operating) | | -20 to +70 (-4 to +158) | | | | ℃ (℉) |
| 12 | Maximum Coil Temperature | | 130 (266) | | | | ℃ (℉) |
| 13 | Bearing Type | | Ball Bearing | | | | |
| 14 | Insulation Resistance at 500 VDC | | 20 | | | | Mohms |
| 15 | Dielectric Withstanding Voltage | | 650 for 2 seconds | | | | VAC |
| 16 | Weight | | 85.2 (3) | | | | g (oz) |
| 17 | Leadwire | | AWG 26, UL 1429 | | | | |

All Motor Data Values at 20℃ Unless Otherwise Specified

# Voltage in case of voltage driver (indicator of R*I)


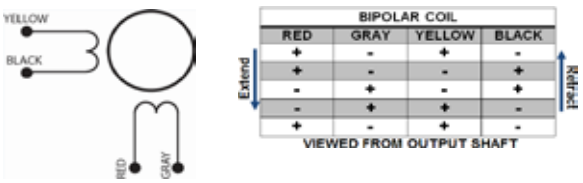


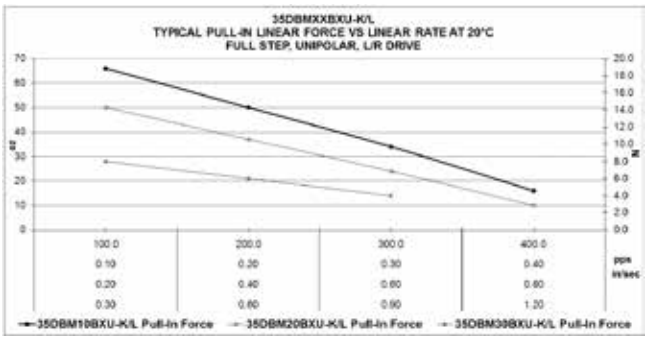


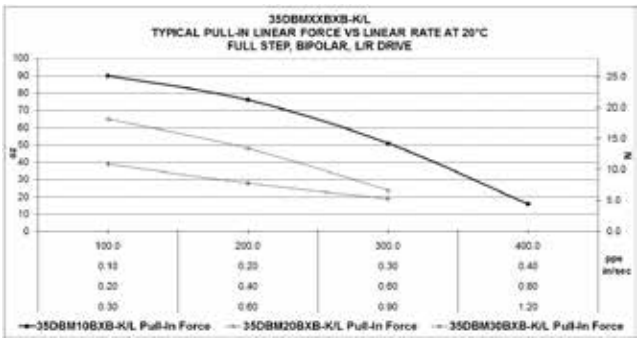


V121616

## 42DBL-K

RoHS Compliant | Ø42mm | 102.9 N

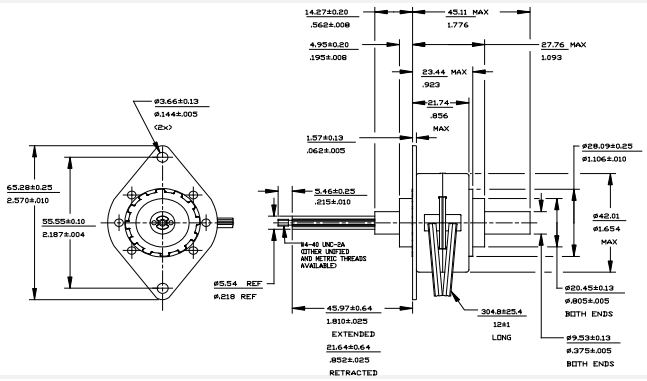


Dimensions in mm

## 42DBL-K

| Electrical Data | | 42DBLXXC1B-K Bipolar | 42DBLXXC2B-K Bipolar | 42DBLXXC1U-K Unipolar | 42DBLXXC2U-K Unipolar | |
|---|---|---|---|---|---|---|
| 1 Operating Voltage # | | 5 | 12 | 5 | 12 | VDC |
| 2 Resistance per Phase, ± 10% | | 5.0 | 28.8 | 5.0 | 28.8 | Ohms |
| 3 Inductance per Phase, typ | | 5.5 | 39.3 | 3.7 | 15.0 | mH |
| 4 Rated Current per Phase, 1 Phase ON | | 1.41 | 0.59 | 1.41 | 0.59 | A |
| 5 Input Power | | 10.0 | 10.0 | 10.0 | 10.0 | W |
| **Coil independent parameters** | **XX Linear travel per step** | | | | | |
| 6 Min. Holding Force @ rated current | 10 @ .001" (0.0254mm) | 102.9 (370) | | 100 (360) | | N (oz) |
| | 20 @ .002" (0.0508mm) | 83.4 (300) | | 72.3 (260) | | N (oz) |
| | 40 @ .004" (0.1016mm) | 55.6 (200) | | 50 (180) | | N (oz) |
| 7 Min. Holding Force (Unenergized) | 10 @ .001" (0.0254mm) | 100 (360) | | | | N (oz) |
| | 20 @ .002" (0.0508mm) | 83.4 (300) | | | | N (oz) |
| | 40 @ .004" (0.1016mm) | 19.5 (70) | | | | N (oz) |
| 8 Stroke Length, Typ | | 24.1 (0.95) | | | | mm (in) |
| 9 Linear Travel Accuracy | | ± 1 Step | | | | |
| 10 Steps per Revolution | | 48 | | | | |
| 11 Ambient Temperature Range (operating) | | -20 to +70 (-4 to +158) | | | | ℃ (℉) |
| 12 Maximum Coil Temperature | | 130 (266) | | | | ℃ (℉) |
| 13 Bearing Type | | Ball Bearing | | | | |
| 14 Insulation Resistance at 500 VDC | | 20 | | | | Mohms |
| 15 Dielectric Withstanding Voltage | | 650 for 2 seconds | | | | VAC |
| 16 Weight | | 156 (5.51) | | | | g (oz) |
| 17 Leadwire | | AWG 26, UL 1430 | | | | |
| All Motor Data Values at 20℃ Unless Otherwise Specified | | # Voltage in case of voltage driver (indicator of R*I) | | | | |


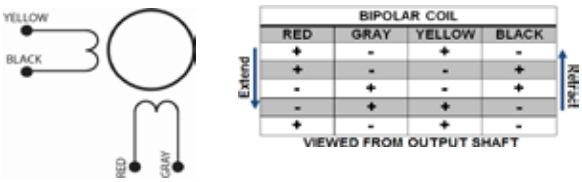


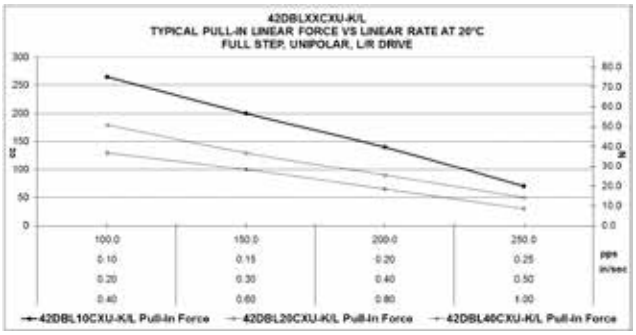


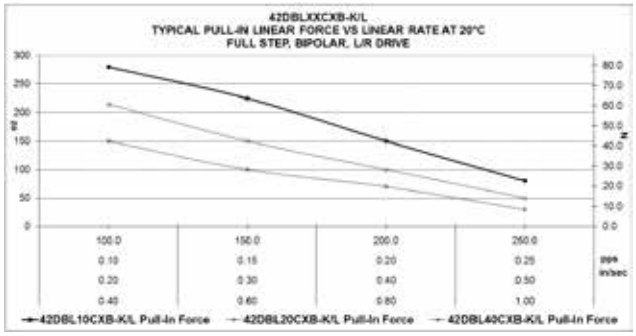


V121616

## 42DBL-L

RoHS Compliant | Ø42mm | 102.9 N

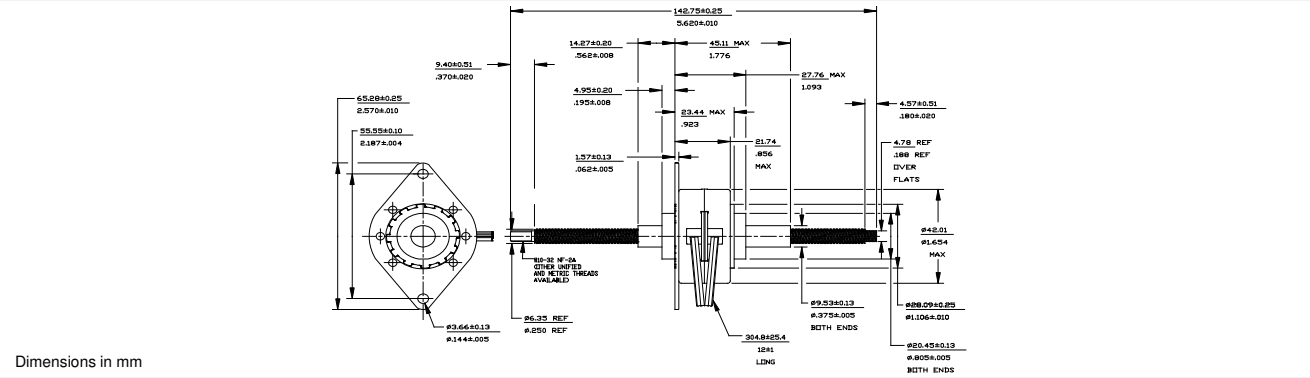


Dimensions in mm

## 42DBL-L

| Electrical Data | | 42DBLXXC1B-L Bipolar | 42DBLXXC2B-L Bipolar | 42DBLXXC1U-L Unipolar | 42DBLXXC2U-L Unipolar | |
|---|---|---|---|---|---|---|
| 1 Operating Voltage # | | 5 | 12 | 5 | 12 | VDC |
| 2 Resistance per Phase, ± 10% | | 5.0 | 28.8 | 5.0 | 28.8 | Ohms |
| 3 Inductance per Phase, typ | | 5.5 | 39.3 | 3.7 | 15.0 | mH |
| 4 Rated Current per Phase, 1 Phase ON | | 1.41 | 0.59 | 1.41 | 0.59 | A |
| 5 Input Power | | 10.0 | 10.0 | 10.0 | 10.0 | W |
| **Coil independent parameters** | **XX Linear travel per step** | | | | | |
| 6 Min. Holding Force @ rated current | 10 @ .001" (0.0254mm) | 102.9 (370) | | 100 (360) | | N (oz) |
| | 20 @ .002" (0.0508mm) | 83.4 (300) | | 72.3 (260) | | N (oz) |
| | 40 @ .004" (0.1016mm) | 55.6 (200) | | 50 (180) | | N (oz) |
| 7 Min. Holding Force (Unenergized) | 10 @ .001" (0.0254mm) | 100 (360) | | | | N (oz) |
| | 20 @ .002" (0.0508mm) | 83.4 (300) | | | | N (oz) |
| | 40 @ .004" (0.1016mm) | 19.5 (70) | | | | N (oz) |
| 8 Stroke Length, Typ | | 76.2 (3) | | | | mm (in) |
| 9 Linear Travel Accuracy | | ± 1 Step | | | | |
| 10 Steps per Revolution | | 48 | | | | |
| 11 Ambient Temperature Range (operating) | | -20 to +70 (-4 to +158) | | | | ℃ (℉) |
| 12 Maximum Coil Temperature | | 130 (266) | | | | ℃ (℉) |
| 13 Bearing Type | | Ball Bearing | | | | |
| 14 Insulation Resistance at 500 VDC | | 20 | | | | Mohms |
| 15 Dielectric Withstanding Voltage | | 650 for 2 seconds | | | | VAC |
| 16 Weight | | 156 (5.51) | | | | g (oz) |
| 17 Leadwire | | AWG 26, UL 1430 | | | | |

All Motor Data Values at 20℃ Unless Otherwise Specified

# Voltage in case of voltage driver (indicator of R*I)

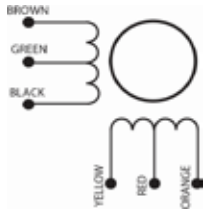


UNIPOLAR COIL

| YELLOW | ORANGE | BROWN | BLACK | RED/GREEN |
|---|---|---|---|---|
| + | - | + | - | + |
| + | - | - | + | + |
| - | + | - | + | + |
| - | + | + | - | + |
| + | - | + | - | + |

Extend ↓ ↑ Retract

VIEWED FROM OUTPUT SHAFT

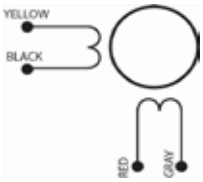


BIPOLAR COIL

| RED | GRAY | YELLOW | BLACK |
|---|---|---|---|
| + | - | + | - |
| + | - | - | + |
| - | + | - | + |
| - | + | + | - |
| + | - | + | - |

Extend ↓ ↑ Retract

VIEWED FROM OUTPUT SHAFT

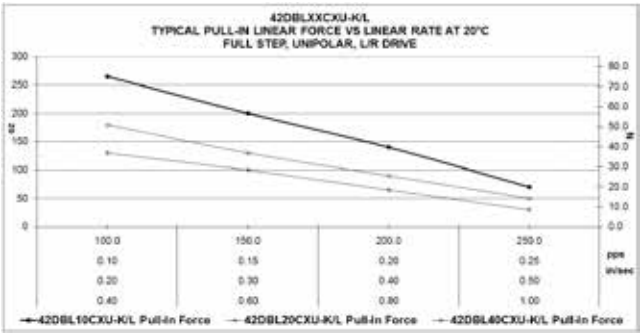


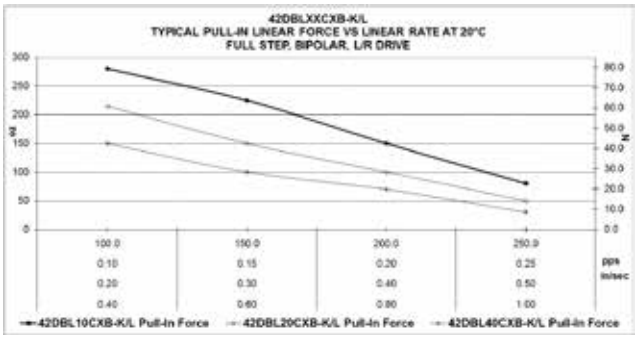


V121616

## 57DBM-L

RoHS Compliant | Ø57mm | 124.6 N

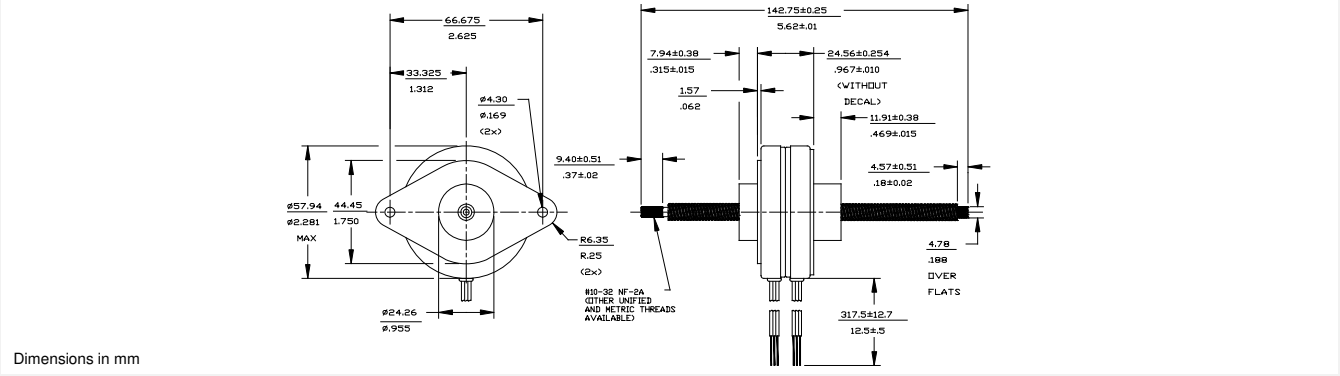


Dimensions in mm

### 57DBM-L

| Electrical Data | | | 57DBMXXB1B-L Bipolar | 57DBMXXB2B-L Bipolar | 57DBMXXB1U-L Unipolar | 57DBMXXB2U-L Unipolar | |
|---|---|---|---|---|---|---|---|
| 1 | Operating Voltage # | | 5 | 12 | 5 | 12 | VDC |
| 2 | Resistance per Phase, ± 10% | | 4.3 | 25.0 | 4.3 | 25.0 | Ohms |
| 3 | Inductance per Phase, typ | | 6.3 | 36.0 | 5.0 | 25.0 | mH |
| 4 | Rated Current per Phase, 1 Phase ON | | 1.64 | 0.67 | 1.64 | 0.67 | A |
| 5 | Input Power | | 12.0 | 12.0 | 12.0 | 12.0 | W |
| **Coil independent parameters** | | **XX** | **Linear travel per step** | | | | |
| 6 | Min. Holding Force @ rated current | 10 | @ .001" (0.0254mm) | 124.6 (448) | 89 (320) | | N (oz) |
| | | 20 | @ .002" (0.0508mm) | 102.4 (368) | 71 (256) | | N (oz) |
| 7 | Min. Holding Force (Unenergized) | 10 | @ .001" (0.0254mm) | 89 (320) | | | N (oz) |
| | | 20 | @ .002" (0.0508mm) | 71 (256) | | | N (oz) |
| 8 | Stroke Length, Typ | | | 76.2 (3) | | | mm (in) |
| 9 | Linear Travel Accuracy | | | ± 1 Step | | | |
| 10 | Steps per Revolution | | | 48 | | | |
| 11 | Ambient Temperature Range (operating) | | | -20 to +70 (-4 to +158) | | | ℃ (℉) |
| 12 | Maximum Coil Temperature | | | 130 (266) | | | ℃ (℉) |
| 13 | Bearing Type | | | Ball Bearing | | | |
| 14 | Insulation Resistance at 500 VDC | | | 20 | | | Mohms |
| 15 | Dielectric Withstanding Voltage | | | 650 for 5 seconds | | | VAC |
| 16 | Weight | | | 454 (16) | | | g (oz) |
| 17 | Leadwire | | | AWG 26, MIL-W-16878/4 | | | |

All Motor Data Values at 20℃ Unless Otherwise Specified

# Voltage in case of voltage driver (indicator of R*I)

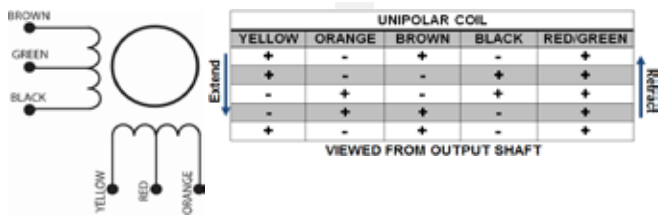


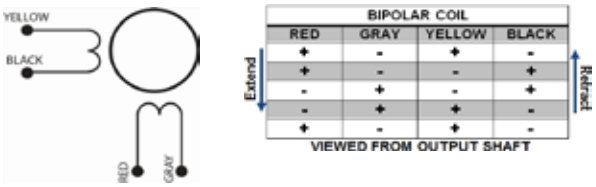


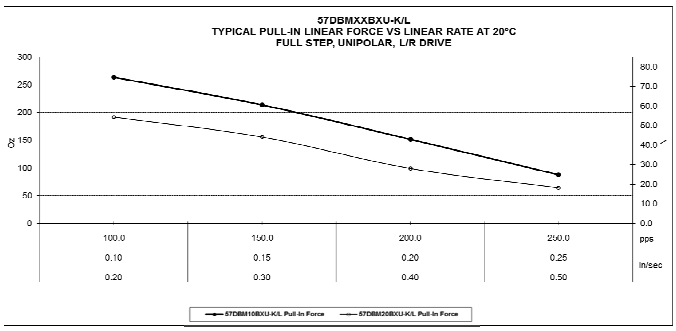


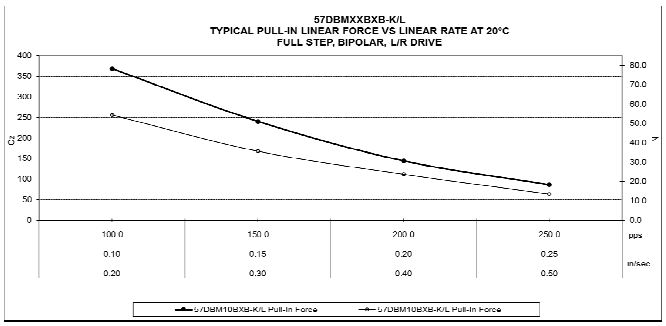


V121616

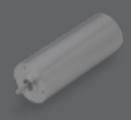
Brushless dc motors


Brush dc motors


Disc magnet motors


Can stack motors


Can stack linear actuators


Gearheads


Encoders

# Gearheads & Encoders

## Gearheads

Gearheads are used between the motor and the load to reduce the speed and/or increase the torque delivered to the load with the best possible efficiency. We offer both planetary and spur gearheads, with each design offering advantages suited to particular applications.

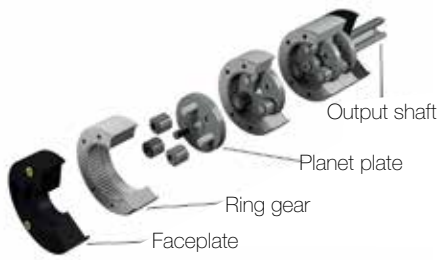


### Spur and Planetary Gearheads

| Type | Details | Application Advantages |
|---|---|---|
| **Spur gear concept: Only one transmission point per train** | • Low friction per train<br>• Multiple trains can be configured to suit design intent<br>• Input and output shaft not necessarily in line<br>• Dual output shafts possible<br>• Direction of rotation can be reversed by using an odd number of reduction stages | • Good efficiency, about 0.9 per train<br>• Long gearbox of smaller diameter or short gearbox of large diameter<br>• Free choice for placing the motor relative to the output shaft<br>• Accommodates mounting of a sensor, potentiometer, etc.<br>• Low noise |
| **Planetary concept: 3 or 4 transmission points per train** | • Higher reduction ratio per train, with a tradeoff of higher friction<br>• Can transmit higher torques<br>• Input and output of a train have the same direction of rotation<br>• Less backlash | • Higher lifetime due to planetary arrangement<br>• Efficiency about 0.85 per train<br>• Exceptional performance in a very compact gearbox<br>• For any number of trains, the load always rotates in the same direction as the motor<br>• Less shock in case of a rapid reversal of motor rotation |

## Encoders

Encoders provide feedback for accurate control of speed and positioning. We offer three types – optical, magnetic and magnetoresistive – all featuring a robust design suitable for severe environments. Resolutions from 1 to 1024 lines per revolution are available, with up to 3 channels.

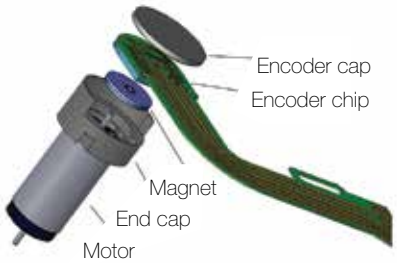


### Optical, Magnetic and Magnetoresistive Encoders

| Type | Details / Features | | Advantages for Application |
|---|---|---|---|
| **Optical** | • Transmissive optical system<br>• 3 Channel (A, B, Z)<br>• Optional line driver | • High accuracy<br>• High line count<br>• Ultra low jitter | • Very precise positioning<br>• No sensitivity to external magnetic field |
| **Magnetic: M-Sense** | • Hall sensor array interpolated<br>• 3 Channel (A, B, Z)<br>• Integrated RS422 line driver | • Integrated design<br>• High line count | • High resolution in a compact design and low diameter<br>• Long commutation lines can be handled between encoder and driver<br>• Axial and radial cable output |
| **Magnetic: MR2** | • Magnetoresistive sensor interpolated<br>• 3 Channel (A, B, Z)<br>• Integrated design | • Compact design<br>• High line count | • Insensitive to temperature<br>• Very low sensitivity to unwanted external field<br>• High resolution in a shorter length |
| **Magnetic: Type D/F** | • Digital Hall sensor (not interpolated)<br>• 2 Channel (A, B)<br>• Insensititve to hostile environment | • Compact design<br>• Negligible unit length increase for Type F<br>• Very low current consumption | • Very low power consumption<br>• Gamma ray-proof version available on request |

# Gearheads and Encoders for any Miniature Application

### Medical devices & clinical diagnostics
- Surgical hand tools
- Laboratory automation
- Infusion systems
- Insulin pumps
- Medical analyzers
- Sample preparation workstations

### Aerospace
- Surveillance camera systems
- Seat actuation
- Valve actuation

### Other
- Nailers & framing systems
- Power hand tools

# Meet your Application's Working Point Requirements

**Gearheads**

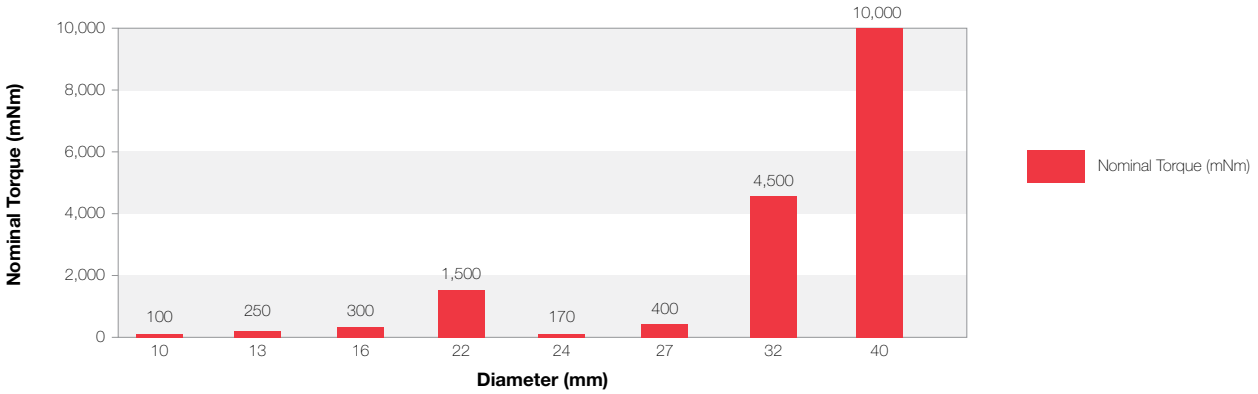


**Encoders**

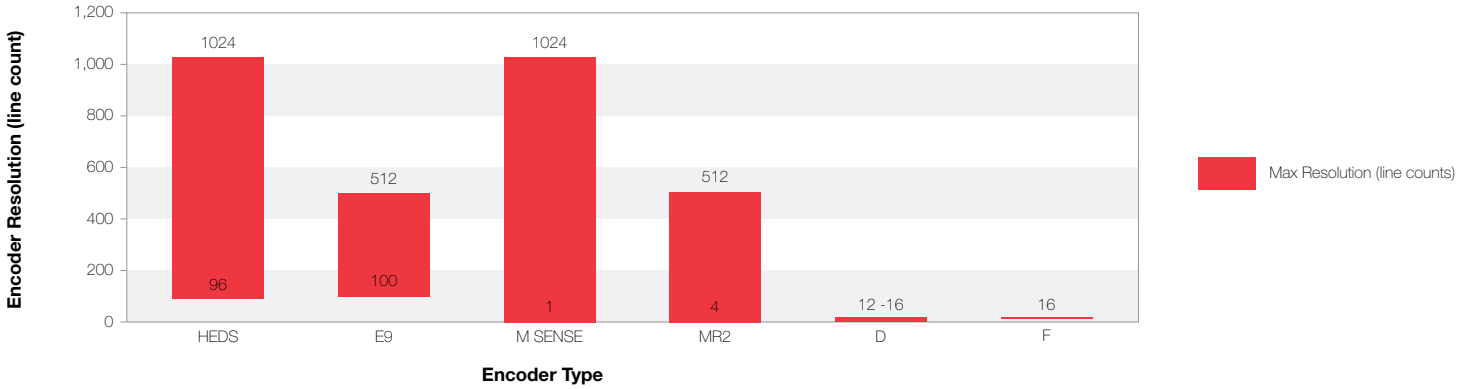


For complete product and application details, visit
**portescap.com/gearheads-encoders**

## R10 Planetary Gearbox ∅ 10mm 0.1 Nm

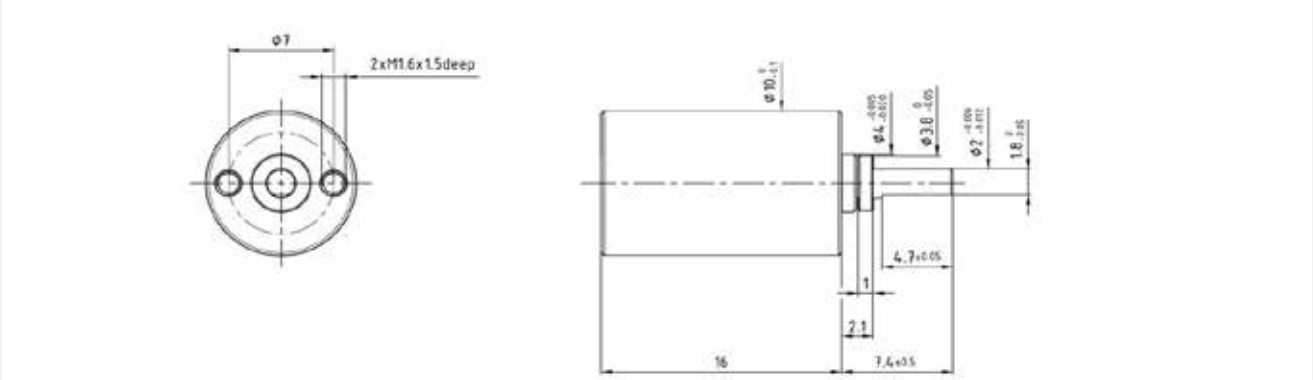


Dimensions in mm

| Ratio **** | | * 4 | 16 | 64 | * 256 | * 1024 | * 4096 |
|---|---|---|---|---|---|---|---|
| 1 | Number of Gear Stages | 1 | 2 | 3 | 4 | 5 | 6 |
| 2 | Direction of Rotation | = | = | = | = | = | = |
| 3 | Efficiency | 0.9 | 0.8 | 0.7 | 0.65 | 0.6 | 0.5 |
| 4 | L(mm) | 9 | 12.5 | 16 | 19.5 | 23 | 26.5 |
| 5 | Weight g (oz) | 3 (0.105) | 4 (0.141) | 5 (0.176) | 6 (0.211) | 7 (0.246) | 8 (0.282) |
| 6 | Available with Motor - L2 = Length with motor (mm) | | | | | | |
| | **08GS61** | 25.6 | 29.1 | 32.6 | 36.1 | 39.6 | 43.1 |
| | **08G61** | 28.6 | 32.1 | 35.6 | 39.1 | 42.6 | 46.1 |
| | **P010** | 25.4 | 28.9 | 32.4 | 35.9 | 39.4 | 42.9 |
| | **10NS61** | 27 | 30.5 | 34 | 37.5 | 41 | 44.5 |
| | **12G88** | 37.2 | 40.7 | 44.2 | 47.7 | 51.2 | 54.7 |

* Ratio available upon request. Please contact us.

| Characteristics | | | R10 • 200 • ···· |
|---|---|---|---|
| 7 | Shaft Bearings | | Sleeve |
| 8 | Maximum Static Torque | Nm (oz-in) | 0.15 (21.2) |
| 9 | Maximum Radial Force | | |
| | @ 8mm from mounting face | N (lb) | 2 (0.45) |
| 10 | Maximum Axial Force | N (lb) | 5 (1.125) |
| 11 | Maximum Press Fit Force | N (lb) | 10 (2.25) |
| 12 | Average Backlash @ no-load | | 1° |
| 13 | Average Backlash @ 0.3 Nm | | 3° |
| | Shaft Play: | | |
| 14 | -radial | µm | ≤ 25 |
| 15 | -axial | µm | 50-150 |
| 16 | Maximum Recommended Input Speed | rpm | 10,000 |
| 17 | Operating Temperature Range: | ℃ (℉) | -30 to +65 (-22 to +150) |

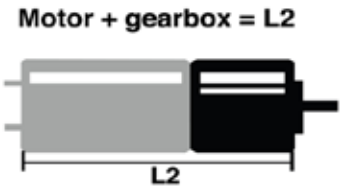


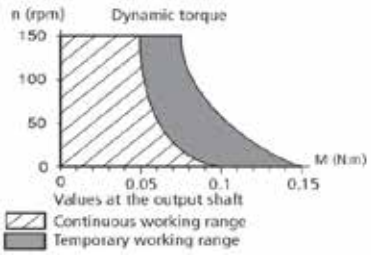


V121616

## R13 Planetary Gearbox ∅ 13mm 0.25 Nm

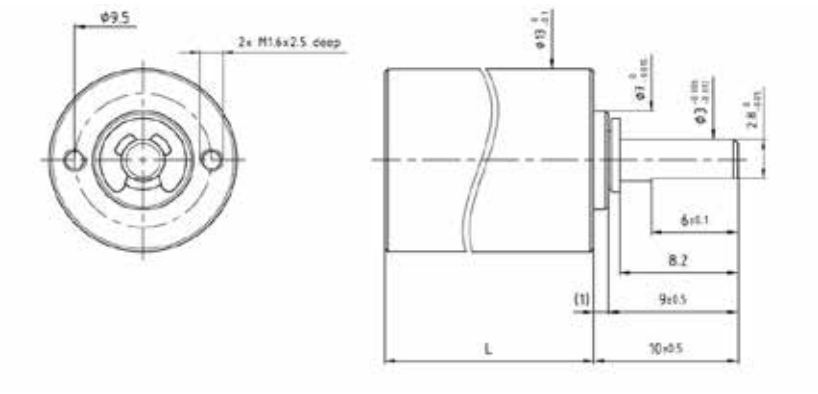


Dimensions in mm

| Ratio **** | | 5.5 | 22 | 30.2 | 88 | 121 | 166 | 352 | 484 | 665.5 | 915 |
|---|---|---|---|---|---|---|---|---|---|---|---|
| 1 | Number of Gear Stages | 1 | 2 | 2 | 3 | 3 | 3 | 4 | 4 | 4 | 4 |
| 2 | Direction of Rotation | = | = | = | = | = | = | = | = | = | = |
| 3 | Efficiency | 0.85 | 0.75 | 0.75 | 0.65 | 0.65 | 0.65 | 0.55 | 0.55 | 0.55 | 0.55 |
| 4 | L(mm) | 14.5 | 18.6 | 18.6 | 22.7 | 22.7 | 22.7 | 26.8 | 26.8 | 26.8 | 26.8 |
| 5 | Weight g (oz) | 6 (0.211) | 9 (0.317) | 9 (0.317) | 12 (0.423) | 12 (0.423) | 12 (0.423) | 15 (0.529) | 15 (0.529) | 15 (0.529) | 15 (0.529) |
| 6 | Available with Motor - L2 = Length with motor (mm) | | | | | | | | | | |
| | **13N 88** | 42.7 | 46.8 | 46.8 | 50.9 | 50.9 | 50.9 | 55 | 55 | 55 | 55 |
| | **12G 88** | 42.7 | 46.8 | 46.8 | 50.9 | 50.9 | 50.9 | 55 | 55 | 55 | 55 |

| Characteristics | | | R13 • 0 • ···· | R13 2R • 0 • ···· |
|---|---|---|---|---|
| 7 | Shaft Bearings | | Sleeve | Ball Bearing |
| 8 | Maximum Static Torque | Nm (oz-in) | 0.5 (71) | 0.5 (71) |
| 9 | Maximum Radial Force | | | |
| | @ 8mm from mounting face | N (lb) | 5 (1.12) | 20 (4.5) |
| 10 | Maximum Axial Force | N (lb) | 8 (1.8) | 10 (2.2) |
| 11 | Maximum Press Fit Force | N (lb) | 100 (23) | 100 (23) |
| 12 | Average Backlash @ no-load | | 1.25° | 1.25° |
| 13 | Average Backlash @ 0.3 Nm | | 2° | 2° |
| | Shaft Play: | | | |
| 14 | -radial | µm | ≤ 20 | ≤ 10 |
| 15 | -axial | µm | 50-150 | ≤50 |
| 16 | Maximum Recommended Input Speed | rpm | 7500 | 7,500 |
| 17 | Operating Temperature Range: | ℃ (℉) | -30 to +85 (-22 to +185) | |

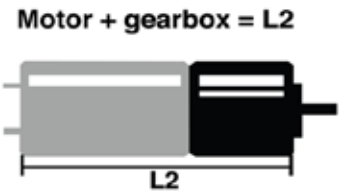


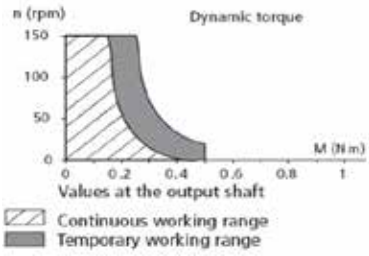


V121616

## B16 Spur Gearbox ∅ 16mm 0.12 Nm

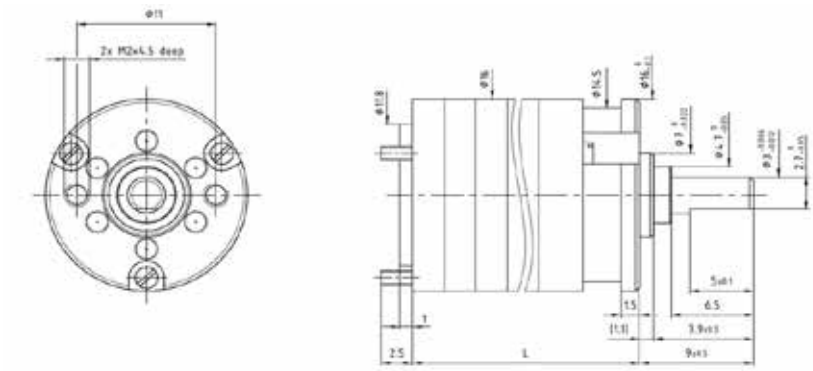

Dimensions in mm

| Ratio | **** | 5 | 9 | 15 | 27 | 45 | 81 | 135 | 141 | 243 | 405 | 729 | 1215 | 2187 |
|---|---|---|---|---|---|---|---|---|---|---|---|---|---|---|
| 1 | Number of Gear Stages | 2 | 2 | 3 | 3 | 4 | 4 | 5 | 5 | 5 | 6 | 6 | 7 | 7 |
| 2 | Direction of Rotation | = | = | ≠ | ≠ | = | = | ≠ | ≠ | ≠ | = | = | ≠ | ≠ |
| 3 | Efficiency | 0.81 | 0.81 | 0.73 | 0.73 | 0.65 | 0.65 | 0.59 | 0.59 | 0.59 | 0.53 | 0.53 | 0.48 | 0.48 |
| 4 | L (mm) | 10.5 | 10.5 | 13 | 13 | 15.5 | 15.5 | 18 | 18 | 18 | 20.5 | 20.5 | 23 | 23 |
| 5 | Weight g (oz) | 7 (0.246) | 7 (0.246) | 8 (0.282) | 8 (0.282) | 9 (0.317) | 9 (0.317) | 10 (0.352) | 10 (0.352) | 10 (0.352) | 11 (0.388) | 11 (0.388) | 12 (0.423) | 12 (0.423) |
| 6 | Available with Motor - L2 = Length with motor (mm) | | | | | | | | | | | | | |
| | **16C18** | 29.2 | 29.2 | 31.7 | 31.7 | 34.2 | 34.2 | 36.7 | 36.7 | 36.7 | 39.2 | 39.2 | 41.7 | 41.7 |
| | **16N28** | 38.5 | 38.5 | 41 | 41 | 43.5 | 43.5 | 46 | 46 | 46 | 48.5 | 48.5 | 51 | 51 |
| | **16N78** | 41.5 | 41.5 | 44 | 44 | 46.5 | 46.5 | 49 | 49 | 49 | 51.5 | 51.5 | 54 | 54 |
| | **16G88** | 41.5 | 41.5 | 44 | 44 | 46.5 | 46.5 | 49 | 49 | 49 | 51.5 | 51.5 | 54 | 54 |
| | **17S78** | 32.2 | 32.2 | 34.7 | 34.7 | 37.2 | 37.2 | 39.7 | 39.7 | 39.7 | 42.2 | 42.2 | 44.7 | 44.7 |
| | **17N78** | 39.4 | 39.4 | 41.9 | 41.9 | 44.4 | 44.4 | 47.9 | 47.9 | 47.9 | 49.4 | 49.4 | 51.9 | 51.9 |
| | **P110** | 29.5 | 29.5 | 32 | 32 | 34.5 | 34.5 | 37 | 37 | 37 | 39.5 | 39.5 | 42 | 42 |
| | **16DCP/17DCT** | 39.5 | 39.5 | 42 | 42 | 44.5 | 44.5 | 47 | 47 | 47 | 49.5 | 49.5 | 52 | 52 |

| Characteristics | | | B16 • 0 • ···· | B16 2R • 0 • ···· |
|---|---|---|---|---|
| 7 | Shaft Bearings | | Sleeve | Ball Bearing |
| 8 | Maximum Static Torque | Nm (oz-in) | 0.4 (56) | 0.4 (56) |
| 9 | Maximum Radial Force | | | |
| | @ 8mm from mounting face | N (lb) | 5 (1.1) | 10 (2.2) |
| 10 | Maximum Axial Force | N (lb) | 5 (1.1) | 10 (2.2) |
| 11 | Maximum Press Fit Force | N (lb) | 100 (23) | 100 (23) |
| 12 | Average Backlash @ no-load | | 1.5° | 1.5° |
| 13 | Average Backlash @ 0.3 Nm | | 3° | 3° |
| | Shaft Play: | | | |
| 14 | -radial | µm | ≤ 20 | ≤ 10 |
| 15 | -axial | µm | 50-150 | ≤ 100 |
| 16 | Maximum Recommended Input Spe | rpm | 8000 | 8000 |
| 17 | Operating Temperature Range: | °C (°F) | -30 to +65 (-22 to +150) | |

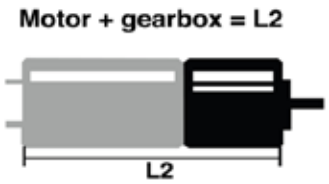


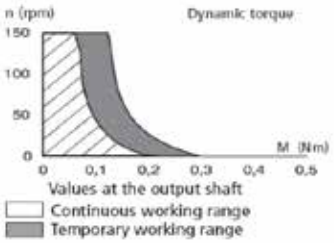


V121616

## BA16 Gearbox with Spur Gears and Planetary Output ∅ 16mm 0.2 Nm

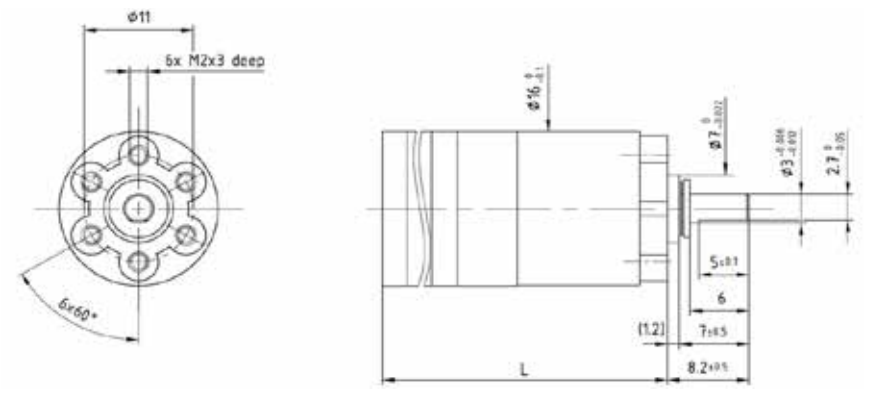


Dimensions in mm

| Ratio | **** | 22.5 | 40.5 | 67.5 | 121.5 | 202.5 | 243 | 364.5 | 607.8 | 1093.5 | 1822.5 | 3280.5 |
|---|---|---|---|---|---|---|---|---|---|---|---|---|
| 1 | Number of Gear Stages | 3 | 3 | 4 | 4 | 5 | 5 | 5 | 6 | 6 | 7 | 7 |
| 2 | Direction of Rotation | = | = | ≠ | ≠ | = | = | = | ≠ | ≠ | = | = |
| 3 | Efficiency | 0.72 | 0.72 | 0.65 | 0.65 | 0.59 | 0.59 | 0.59 | 0.53 | 0.53 | 0.48 | 0.48 |
| 4 | L (mm) | 26.7 | 26.7 | 29.2 | 29.2 | 31.7 | 31.7 | 31.7 | 34.2 | 34.2 | 36.7 | 36.7 |
| 5 | Weight g (oz) | 12 (0.423) | 12 (0.423) | 13 (0.458) | 13 (0.458) | 14 (0.493) | 14 (0.493) | 15 (0.529) | 15 (0.529) | 15 (0.529) | 16 (0.564) | 16 (0.564) |
| 6 | Available with Motor - L2 = Length with motor (mm) | | | | | | | | | | | |
| | **16C18** | 45.4 | 45.4 | 47.9 | 47.9 | 51.4 | 51.4 | 51.4 | 52.9 | 52.9 | 55.4 | 55.4 |
| | **16N28/78** | 54.7 | 54.7 | 57.2 | 57.2 | 59.7 | 59.7 | 59.7 | 62.2 | 62.2 | 64.7 | 64.7 |
| | **16G88** | 54.7 | 54.7 | 57.2 | 57.2 | 59.7 | 59.7 | 59.7 | 62.2 | 62.2 | 64.7 | 64.7 |
| | **17S78** | 48.4 | 48.4 | 50.9 | 50.9 | 53.4 | 53.4 | 53.4 | 55.9 | 55.9 | 58.4 | 58.4 |
| | **17N78** | 52.6 | 52.6 | 55.1 | 55.1 | 57.6 | 57.6 | 57.6 | 60.1 | 60.1 | 62.6 | 62.6 |
| | **P110** | 45.7 | 45.7 | 48.2 | 48.2 | 50.7 | 50.7 | 50.7 | 53.2 | 53.2 | 55.7 | 55.7 |
| | **16DCP/17DCT** | 52.7 | 52.7 | 55.2 | 55.2 | 57.7 | 57.7 | 57.7 | 60.2 | 60.2 | 62.7 | 62.7 |

| Characteristics | | | BA16 • 0 • •••• | BA16 2R • 0 • •••• |
|---|---|---|---|---|
| 7 | Shaft Bearings | | Sleeve | Ball Bearing |
| 8 | Maximum Static Torque | Nm (oz-in) | 0.4 (57) | 0.4 (57) |
| 9 | Maximum Radial Force | | | |
| | @ 8mm from mounting face | N (lb) | 5 (1.1) | 15 (3.3) |
| 10 | Maximum Axial Force | N (lb) | 5 (1.1) | 10 (2.2) |
| 11 | Maximum Press Fit Force | N (lb) | 200 (44) | 200 (44) |
| 12 | Average Backlash @ no-load | | 1.5° | 1.5° |
| 13 | Average Backlash @ 0.3 Nm | | 3° | 3° |
| | Shaft Play: | | | |
| 14 | -radial | µm | ≤ 30 | ≤ 10 |
| 15 | -axial | µm | ≤ 150 | ≤ 100 |
| 16 | Maximum Recommended Input Speed | rpm | 8000 | 8,000 |
| 17 | Operating Temperature Range: | °C (°F) | -30 to +65 (-22 to +150) | |

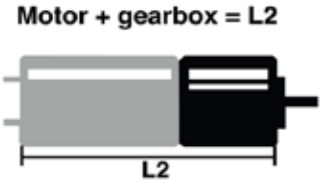


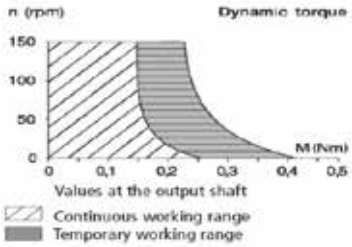


V121616

## R16 Planetary Gearbox ∅ 16mm 0.3 Nm

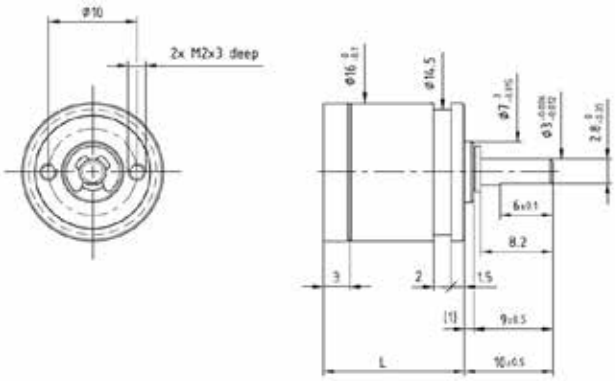


Dimensions in mm

| Ratio **** | 5.5 | 22 | 30.2 | 88 | 121 | 166 | 352 | 484 | 665.5 | 915 |
|---|---|---|---|---|---|---|---|---|---|---|
| 1 Number of Gear Stages | 1 | 2 | 2 | 3 | 3 | 3 | 4 | 4 | 4 | 4 |
| 2 Direction of Rotation | = | = | = | = | = | = | = | = | = | = |
| 3 Efficiency | 0.85 | 0.75 | 0.75 | 0.65 | 0.65 | 0.65 | 0.55 | 0.55 | 0.55 | 0.55 |
| 4 L(mm) | 16 | 20.1 | 20.1 | 24.2 | 24.2 | 24.2 | 28.3 | 28.3 | 28.3 | 28.3 |
| 5 Weight g (oz) | 10 (0.352) | 13 (0.458) | 13 (0.458) | 16 (0.564) | 16 (0.564) | 16 (0.564) | 19 (0.670) | 19 (0.670) | 19 (0.670) | 19 (0.670) |
| 6 Available with Motor - L2 = Length with motor (mm) | | | | | | | | | | |
| **16C18** | 31.7 | 35.8 | 35.8 | 39.9 | 39.9 | 39.9 | 44 | 44 | 44 | 44 |
| **16N28/78** | 44 | 48.1 | 48.1 | 52.2 | 52.2 | 52.2 | 56.3 | 56.3 | 56.3 | 56.3 |
| **16G88** | 44 | 48.1 | 48.1 | 52.2 | 52.2 | 52.2 | 56.3 | 56.3 | 56.3 | 56.3 |
| **17S78** | 34.7 | 38.8 | 38.8 | 42.9 | 42.9 | 42.9 | 47 | 47 | 47 | 47 |
| **17N78** | 41.9 | 46 | 46 | 50.1 | 50.1 | 50.1 | 54.2 | 54.2 | 54.2 | 54.2 |
| **P110** | 35 | 39.1 | 39.1 | 43.2 | 43.2 | 43.2 | 47.3 | 47.3 | 47.3 | 47.3 |
| **16DCP/17DCT** | 42 | 46.1 | 46.1 | 50.2 | 50.2 | 50.2 | 54.3 | 54.3 | 54.3 | 54.3 |
| **16ECP36** | 50.5 | 54.6 | 54.6 | 58.7 | 58.7 | 58.7 | 62.8 | 62.8 | 62.8 | 62.8 |
| **16ECP52** | 66.5 | 70.6 | 70.6 | 74.7 | 74.7 | 74.7 | 78.8 | 78.8 | 78.8 | 78.8 |
| **32BF** | 27.2 | 31.3 | 31.3 | 35.4 | 35.4 | 35.4 | 39.5 | 39.5 | 39.5 | 39.5 |

| Characteristics | | R16 • 0 • …. | R16 2R • 0 • …. |
|---|---|---|---|
| 7 Shaft Bearings | | Sleeve | Ball Bearing |
| 8 Maximum Static Torque | Nm (oz-in) | 1 (141) | 1 (141) |
| 9 Maximum Radial Force | | | |
| @ 8mm from mounting face | N (lb) | 5 (1.12) | 20 (4.5) |
| 10 Maximum Axial Force | N (lb) | 8 (1.8) | 10 (2.2) |
| 11 Maximum Press Fit Force | N (lb) | 100 (23) | 100 (23) |
| 12 Average Backlash @ no-load | | 1.25° | 1.25° |
| 13 Average Backlash @ 0.3 Nm | | 2° | 2° |
| Shaft Play: | | | |
| 14 -radial | µm | ≤ 20 | ≤ 10 |
| 15 -axial | µm | 50-150 | ≤ 50 |
| 16 Maximum Recommended Input Speed | rpm | 7500 | 7,500 |
| 17 Operating Temperature Range: | ℃ (℉) | -30 to +85 (-22 to +185) | |

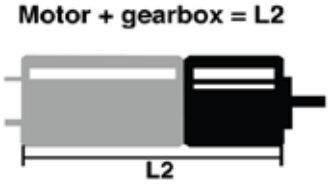


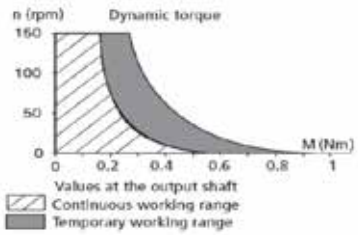


V121616

## R22 Planetary Gearbox ∅ 22mm 0.6 Nm

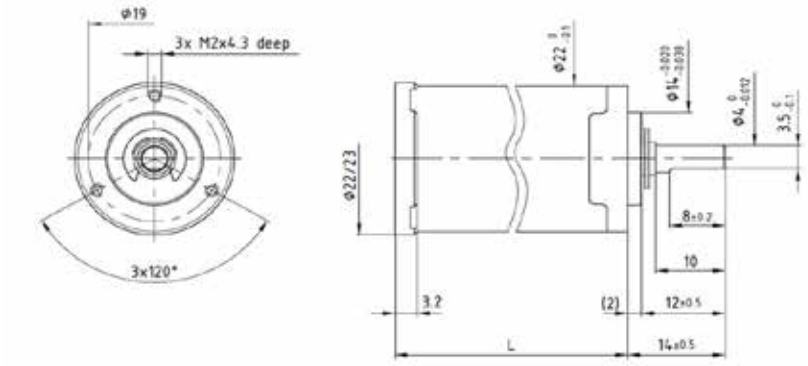


Dimensions in mm

| Ratio | **** | 5.75 | 16.2 | 19.4 | 27.6 | 33.1 | 65.5 | 93.2 | 111 | 132 | 159 | 190 | 376 | 641 | 1090 |
|---|---|---|---|---|---|---|---|---|---|---|---|---|---|---|---|
| 1 | Number of Gear Stages | 1 | 2 | 2 | 2 | 2 | 3 | 3 | 3 | 3 | 3 | 3 | 4 | 4 | 4 |
| 2 | Direction of Rotation | = | = | = | = | = | = | = | = | = | = | = | = | = | = |
| 3 | Efficiency | 0.8 | 0.7 | 0.7 | 0.7 | 0.7 | 0.6 | 0.6 | 0.6 | 0.6 | 0.6 | 0.6 | 0.5 | 0.5 | 0.5 |
| 4 | L(mm) | 25 | 32.5 | 32.5 | 32.5 | 32.5 | 40 | 40 | 40 | 40 | 40 | 40 | 40 | 40 | 40 |
| 5 | Weight g (oz) | 20 (0.705) | 25 (0.881) | 25 (0.881) | 25 (0.881) | 25 (0.881) | 30 (1.058) | 30 (1.058) | 30 (1.058) | 30 (1.058) | 30 (1.058) | 30 (1.058) | 33 (1.164) | 33 (1.164) | 33 (1.164) |
| 6 | Available with Motor - L2 = Length with motor (mm) | | | | | | | | | | | | | | |
| | **22S78** | 51 | 58.5 | 58.5 | 58.5 | 58.5 | 66 | 66 | 66 | 66 | 66 | 66 | 66 | 66 | 66 |
| | **22N78** | 57 | 64.5 | 64.5 | 64.5 | 64.5 | 72 | 72 | 72 | 72 | 72 | 72 | 72 | 72 | 72 |
| | **22V28** | 59.4 | 66.9 | 66.9 | 66.9 | 66.9 | 74.4 | 74.4 | 74.4 | 74.4 | 74.4 | 74.4 | 74.4 | 74.4 | 74.4 |
| | **22V48** | 61.2 | 68.7 | 68.7 | 68.7 | 68.7 | 76.2 | 76.2 | 76.2 | 76.2 | 76.2 | 76.2 | 76.2 | 76.2 | 76.2 |
| | **23GST82** | 60.1 | 67.6 | 67.6 | 67.6 | 67.6 | 75.1 | 75.1 | 75.1 | 75.1 | 75.1 | 75.1 | 75.1 | 75.1 | 75.1 |
| | **26N58** | 68.3 | 75.8 | 75.8 | 75.8 | 75.8 | 83.3 | 83.3 | 83.3 | 83.3 | 83.3 | 83.3 | 83.3 | 83.3 | 83.3 |
| | **26N48** | 67.1 | 74.6 | 74.6 | 74.6 | 74.6 | 82.1 | 82.1 | 82.1 | 82.1 | 82.1 | 82.1 | 82.1 | 82.1 | 82.1 |
| | **28L18/28** | 68.5 | 76 | 76 | 76 | 76 | 83.5 | 83.5 | 83.5 | 83.5 | 83.5 | 83.5 | 83.5 | 83.5 | 83.5 |
| | **28LT12** | 66.2 | 73.7 | 73.7 | 73.7 | 73.7 | 81.2 | 81.2 | 81.2 | 81.2 | 81.2 | 81.2 | 81.2 | 81.2 | 81.2 |
| | **P310** | 42.4 | 49.9 | 49.9 | 49.9 | 49.9 | 57.4 | 57.4 | 57.4 | 57.4 | 57.4 | 57.4 | 57.4 | 57.4 | 57.4 |
| | **22DCP/24DCT** | 55* | 62.5 | 62.5 | 62.5 | 62.5 | 70 | 70* | 70 | 70 | 70 | 70 | 70 | 70 | 70 |

| Characteristics | | | R22 • 0 • ···· | R22 2R • 0 • ···· |
|---|---|---|---|---|
| 7 | Shaft Bearings | | Sleeve | Ball Bearing |
| 8 | Maximum Static Torque | Nm (oz-in) | 2 (283) | 2 (283) |
| 9 | Maximum Radial Force | | | |
| | @ 8mm from mounting face | N (lb) | 10 (2.2) | 15.(3.3) |
| 10 | Maximum Axial Force | N (lb) | 10 (2.2) | 10 (2.2) |
| 11 | Maximum Press Fit Force | N (lb) | 300 (67.4) | 300 (67.4) |
| 12 | Average Backlash @ no-load | | 1.5° | 1.5° |
| 13 | Average Backlash @ 0.3 Nm | | 3° | 3° |
| | Shaft Play: | | | |
| 14 | -radial | µm | ≤ 25 | ≤ 10 |
| 15 | -axial | µm | 50-150 | 50-150 |
| 16 | Maximum Recommended Input Spee | rpm | 5000 | 5,000 |
| 17 | Operating Temperature Range: | ℃ (℉) | -30 to +65 (-22 to +150) | |

**Motor + gearbox = L2**


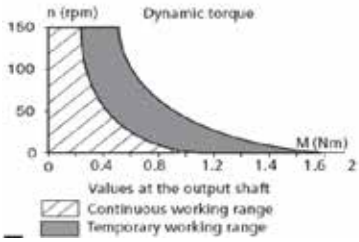


V121616

## M22 Planetary Gearbox ∅ 22mm 1.5 Nm

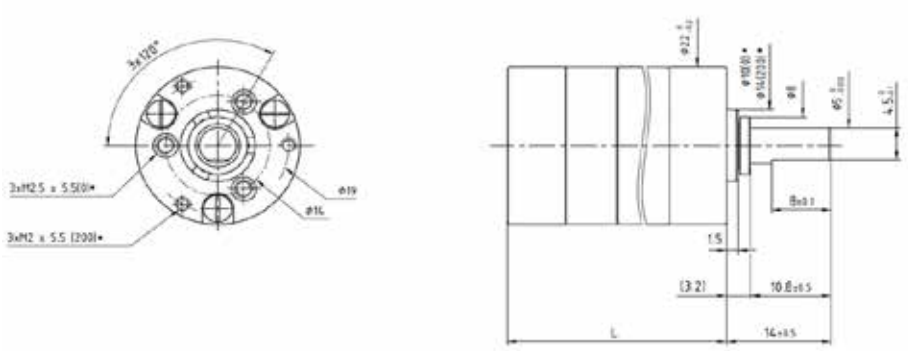

Dimensions in mm

| Ratio | **** | 3.67 | 5 | 13.4 | 18.3 | 25 | 49.3 | 67.2 | 91.7 | 125 | 180.8 | 246.5 | 336.1 | 458.3 | 625 | 903.8 |
|---|---|---|---|---|---|---|---|---|---|---|---|---|---|---|---|---|
| 1 | Number of Gear Stages | 1 | 1 | 2 | 2 | 2 | 3 | 3 | 3 | 3 | 4 | 4 | 4 | 4 | 4 | 5 |
| 2 | Direction of Rotation | = | = | = | = | = | = | = | = | = | = | = | = | = | = | = |
| 3 | Efficiency | 0.8 | 0.8 | 0.7 | 0.7 | 0.7 | 0.6 | 0.6 | 0.6 | 0.6 | 0.55 | 0.55 | 0.55 | 0.55 | 0.55 | 0.5 |
| 4 | L (mm) | 22.6 | 22.6 | 29.5 | 29.5 | 29.5 | 36.4 | 36.4 | 36.4 | 36.4 | 43.3 | 43.3 | 43.3 | 43.3 | 43.3 | 50.2 |
| 5 | Weight g (oz) | 26 (0.917) | 26 (0.917) | 33 (1.164) | 33 (1.164) | 33 (1.164) | 40 (1.552) | 40 (1.552) | 40 (1.552) | 40 (1.552) | 47 (1.657) | 47 (1.657) | 47 (1.657) | 47 (1.657) | 47 (1.657) | 54 (1.904) |
| 6 | Available with Motor - L2 = Length with motor (mm) | | | | | | | | | | | | | | | |
| | **22V28** | 57 | 57 | 63.9 | 63.9 | 63.9 | 70.8 | 70.8 | 70.8 | 70.8 | 77.7 | 77.7 | 77.7 | 77.7 | 77.7 | 84.6 |
| | **22V48** | 58.8 | 58.8 | 65.7 | 65.7 | 65.7 | 72.6 | 72.6 | 72.6 | 72.6 | 79.5 | 79.5 | 79.5 | 79.5 | 79.5 | 86.4 |
| | **22N78** | 54.6 | 54.6 | 61.5 | 61.5 | 61.5 | 68.4 | 68.4 | 68.4 | 68.4 | 75.3 | 75.3 | 75.3 | 75.3 | 75.3 | 82.2 |
| | **22N98** | 56.5 | 56.5 | 63.4 | 63.4 | 63.4 | 70.3 | 70.3 | 70.3 | 70.3 | 77.2 | 77.2 | 77.2 | 77.2 | 77.2 | 84.1 |
| | **23GST82** | 58.6 | 58.6 | 65.5 | 65.5 | 65.5 | 72.4 | 72.4 | 72.4 | 72.4 | 79.3 | 79.3 | 79.3 | 79.3 | 79.3 | 86.2 |
| | **25GST82** | 66.1 | 66.1 | 73 | 73 | 73 | 79.9 | 79.9 | 79.9 | 79.9 | 86.8 | 86.8 | 86.8 | 86.8 | 86.8 | 93.7 |
| | **25GT** | 76.05 | 76.05 | 82.95 | 82.95 | 82.95 | 89.85 | 89.85 | 89.85 | 89.85 | 96.75 | 96.75 | 96.75 | 96.75 | 96.75 | 103.65 |
| | **26N58** | 65.9 | 65.9 | 72.8 | 72.8 | 72.8 | 79.7 | 79.7 | 79.7 | 79.7 | 86.6 | 86.6 | 86.6 | 86.6 | 86.6 | 93.5 |
| | **26N48** | 64.7 | 64.7 | 71.6 | 71.6 | 71.6 | 78.5 | 78.5 | 78.5 | 78.5 | 85.4 | 85.4 | 85.4 | 85.4 | 85.4 | 92.3 |
| | **28L28** | 66.1 | 66.1 | 73 | 73 | 73 | 79.9 | 79.9 | 79.9 | 79.9 | 86.8 | 86.8 | 86.8 | 86.8 | 86.8 | 93.7 |
| | **28LT12** | 63.8 | 63.8 | 70.7 | 70.7 | 70.7 | 77.6 | 77.6 | 77.6 | 77.6 | 84.5 | 84.5 | 84.5 | 84.5 | 84.5 | 91.4 |
| | **22DCP/24DCT** | 54.6 | 54.6 | 61.5 | 61.5 | 61.5 | 68.4 | 68.4 | 68.4 | 68.4 | 75.3 | 75.3 | 75.3 | 75.3 | 75.3 | 82.2 |
| | **22ECP45** | 67.6 | 67.6 | 74.5 | 74.5 | 74.5 | 81.4 | 81.4 | 81.4 | 81.4 | 88.3 | 88.3 | 88.3 | 88.3 | 88.3 | 95.2 |
| | **22ECP60** | 82.6 | 82.6 | 89.5 | 89.5 | 89.5 | 96.4 | 96.4 | 96.4 | 96.4 | 103.3 | 103.3 | 103.3 | 103.3 | 103.3 | 110.2 |

| Characteristics | | | M22 • 0 / • 200 • ···· |
|---|---|---|---|
| 7 | Shaft Bearings | | Sleeve |
| 8 | Maximum Static Torque | Nm (oz-in) | 4 (556) |
| 9 | Maximum Radial Force | | |
| | @ 8mm from mounting face | N (lb) | 50 (11) |
| 10 | Maximum Axial Force | N (lb) | 70 (16) |
| 11 | Maximum Press Fit Force | N (lb) | 100 (22) |
| 12 | Average Backlash @ no-load | | 2° |
| 13 | Average Backlash @ 0.3 Nm | | 3° |
| | Shaft Play: | | |
| 14 | -radial | µm | ≤ 200 |
| 15 | -axial | µm | 50-150 |
| 16 | Maximum Recommended Input Speed | rpm | 7500 |
| 17 | Operating Temperature Range: | ℃ (℉) | -30 to +65 (-22 to +150) |

**Motor + gearbox = L2**


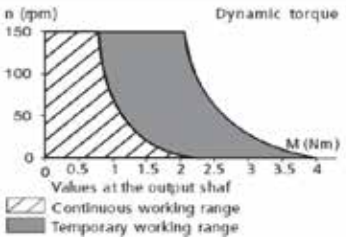


V121616

# K24 Spur Gearbox ∅ 24mm 0.17 Nm

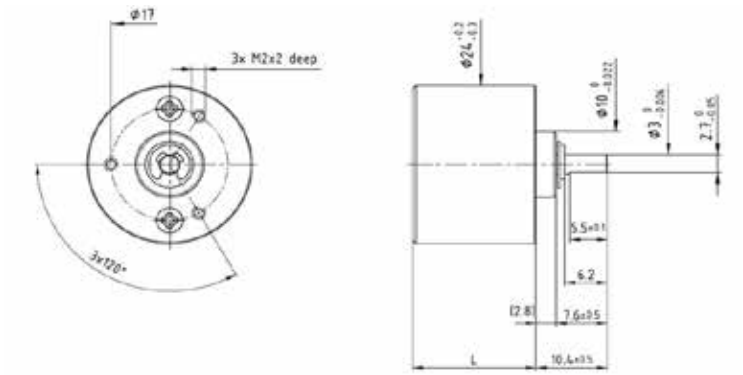


Dimensions in mm

| Ratio **** | 5 | 8 | 20 | 32 | 64 | 128 | 320 | 800 | 2048 |
|---|---|---|---|---|---|---|---|---|---|
| 1 Number of Gear Stages | 2 | 2 | 4 | 4 | 4 | 4 | 6 | 6 | 6 |
| 2 Direction of Rotation | = | = | = | = | = | = | = | = | = |
| 3 Efficiency | 0.85 | 0.85 | 0.75 | 0.75 | 0.75 | 0.75 | 0.65 | 0.65 | 0.65 |
| 4 L (mm) | 15 | 15 | 18 | 18 | 18 | 18 | 21 | 21 | 21 |
| 5 Weight g (oz) | 15 (0.529) | 15 (0.529) | 18 (0.634) | 18 (0.634) | 18 (0.634) | 18 (0.634) | 20 (0.705) | 20 (0.705) | 20 (0.705) |
| 6 Available with Motor - L2 = Length with motor (mm) | | | | | | | | | |
| **22V28** | 49.4 | 49.4 | 52.4 | 52.4 | 52.4 | 52.4 | 55.4 | 55.4 | 55.4 |
| **22V48** | 51.2 | 51.2 | 54.2 | 54.2 | 54.2 | 54.2 | 57.2 | 57.2 | 57.2 |
| **22N78** | 47 | 47 | 50 | 50 | 50 | 50 | 53 | 53 | 53 |
| **22N98** | 48.9 | 48.9 | 51.9 | 51.9 | 51.9 | 51.9 | 54.9 | 54.9 | 54.9 |
| **26N58** | 58.3 | 58.3 | 61.3 | 61.3 | 61.3 | 61.3 | 64.3 | 64.3 | 64.3 |
| **26N48** | 57.1 | 57.1 | 60.1 | 60.1 | 60.1 | 60.1 | 63.1 | 63.1 | 63.1 |
| **P310** | 32.4 | 32.4 | 35.4 | 35.4 | 35.4 | 35.4 | 38.4 | 38.4 | 38.4 |
| **22DCP/24DCT** | 50.2 | 50.2 | 53.2 | 53.2 | 53.2 | 53.2 | 56.2 | 56.2 | 56.2 |

| Characteristics | | K24 • 0 • •••• | K24 2R • 0 • •••• |
|---|---|---|---|
| 7 Shaft Bearings | | Sleeve | Ball Bearing |
| 8 Maximum Static Torque | Nm (oz-in) | 0.7 (100) | 0.7 (100) |
| 9 Maximum Radial Force | | | |
| @ 8mm from mounting face | N (lb) | 5 (1.1) | 20 (4.5) |
| 10 Maximum Axial Force | N (lb) | 8 (1.8) | 10 (2.2) |
| 11 Maximum Press Fit Force | N (lb) | 30 (6.7) | 30 (6.7) |
| 12 Average Backlash @ no-load | | 1.5° | 1.5° |
| 13 Average Backlash @ 0.3 Nm | | 2.5° | 2.5° |
| Shaft Play: | | | |
| 14 -radial | µm | ≤ 40 | ≤ 10 |
| 15 -axial | µm | 50-150 | ≤ 10 |
| 16 Maximum Recommended Input Speed | rpm | 5000 | 5,000 |
| 17 Operating Temperature Range: | °C (°F) | -30 to +65 (-22 to +150) | |

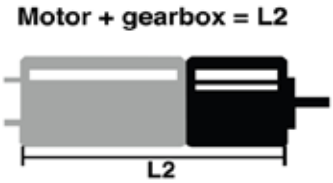


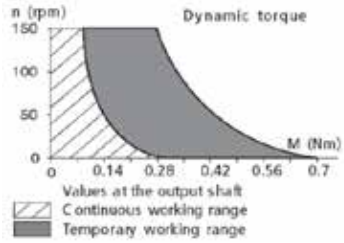


V121616

## K27 Spur Gearbox ∅ 27mm 0.4 Nm

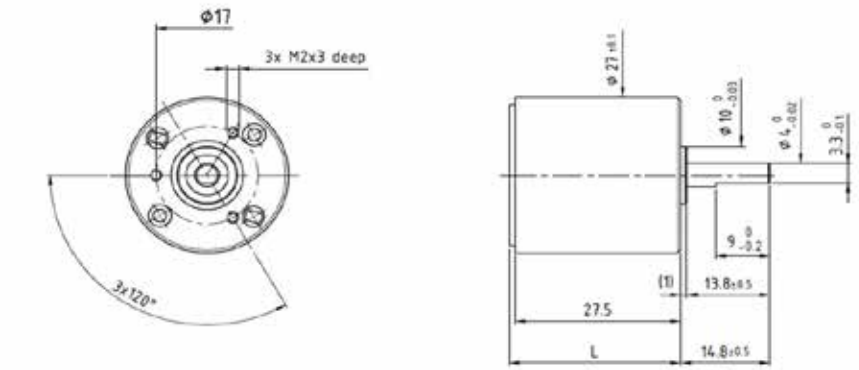


Dimensions in mm

| Ratio **** | | 6.2 | 18.6 | 27.9 | 55.7 | 99.1 | 198 | 501 | 979 | 2970 |
|---|---|---|---|---|---|---|---|---|---|---|
| 1 | Number of Gear Stages | 4 | 4 | 4 | 4 | 6 | 6 | 6 | 6 | 9 |
| 2 | Direction of Rotation | = | = | = | = | = | = | = | = | ≠ |
| 3 | Efficiency | 0.65 | 0.65 | 0.65 | 0.65 | 0.55 | 0.55 | 0.55 | 0.55 | 0.4 |
| 4 | L (mm) | 28.5 | 28.5 | 28.5 | 28.5 | 28.5 | 28.5 | 28.5 | 28.5 | 28.5 |
| 5 | Weight g (oz) | 40 (1.410) | 40 (1.410) | 40 (1.410) | 40 (1.410) | 42 (1.481) | 42 (1.481) | 42 (1.481) | 42 (1.481) | 48 (1.693) |
| 6 | Available with Motor - L2 = Length with motor (mm) | | | | | | | | | |
| | **22V28** | 62.9 | 62.9 | 62.9 | 62.9 | 62.9 | 62.9 | 62.9 | 62.9 | 62.9 |
| | **22V48** | 64.7 | 64.7 | 64.7 | 64.7 | 64.7 | 64.7 | 64.7 | 64.7 | 64.7 |
| | **22N78** | 60.5 | 60.5 | 60.5 | 60.5 | 60.5 | 60.5 | 60.5 | 60.5 | 60.5 |
| | **22N98** | 62.4 | 62.4 | 62.4 | 62.4 | 62.4 | 62.4 | 62.4 | 62.4 | 62.4 |
| | **23GST82** | 63.6 | 63.6 | 63.6 | 63.6 | 63.6 | 63.6 | 63.6 | 63.6 | 63.6 |
| | **26N58** | 71.8 | 71.8 | 71.8 | 71.8 | 71.8 | 71.8 | 71.8 | 71.8 | 71.8 |
| | **26N48** | 70.6 | 70.6 | 70.6 | 70.6 | 70.6 | 70.6 | 70.6 | 70.6 | 70.6 |
| | **P310** | 45.9 | 45.9 | 45.9 | 45.9 | 45.9 | 45.9 | 45.9 | 45.9 | 45.9 |
| | **22DCP/24DCT** | 60.5 | 60.5 | 60.5 | 60.5 | 60.5 | 60.5 | 60.5 | 60.5 | 60.5 |

| Characteristics | | | K27 • 0 • ···· | K27 2R • 0 • ···· |
|---|---|---|---|---|
| 7 | Shaft Bearings | | Sleeve | Ball Bearing |
| 8 | Maximum Static Torque | Nm (oz-in) | 0.7 (100) | 0.7 (100) |
| 9 | Maximum Radial Force | | | |
| | @ 8mm from mounting face | N (lb) | 20 (4.5) | 25 (5.5) |
| 10 | Maximum Axial Force | N (lb) | 8 (1.8) | 40 (9) |
| 11 | Maximum Press Fit Force | N (lb) | 300 (67.5) | 60 (13.5) |
| 12 | Average Backlash @ no-load | | 2° | 2° |
| 13 | Average Backlash @ 0.3 Nm | | 3° | 3° |
| | Shaft Play: | | | |
| 14 | -radial | µm | ≤ 60 | ≤ 20 |
| 15 | -axial | µm | 50-150 | ≤ 100 |
| 16 | Maximum Recommended Input Speed | rpm | 4000 | 4,000 |
| 17 | Operating Temperature Range: | ℃ (℉) | -30 to +65 (-22 to +150) | |

**Motor + gearbox = L2**


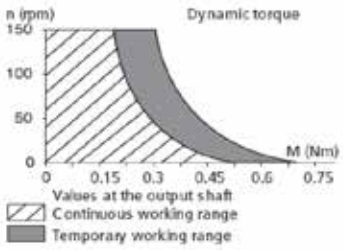


V121616

## R32 Planetary Gearbox ∅ 32mm 4.5 Nm

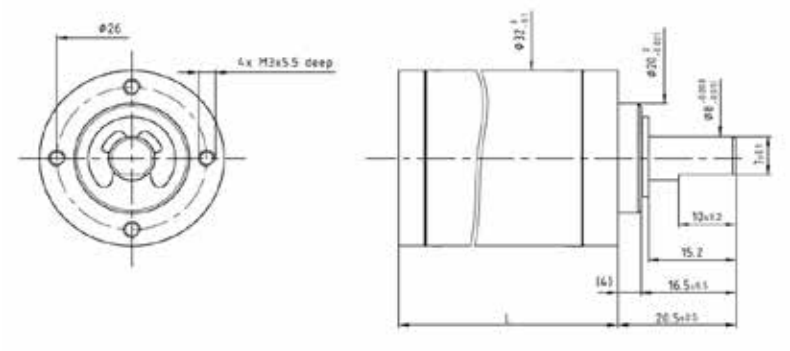


Dimensions in mm

| Ratio **** | 5.75 | 17.4 | 24 | 33 | 72.3 | 99.8 | 138 | 190 | 301 | 416 | 574 | 792 | 1090 |
|---|---|---|---|---|---|---|---|---|---|---|---|---|---|
| 1 Number of Gear Stages | 1 | 2 | 2 | 2 | 3 | 3 | 3 | 3 | 4 | 4 | 4 | 4 | 4 |
| 2 Direction of Rotation | = | = | = | = | = | = | = | = | = | = | = | = | = |
| 3 Efficiency | 0.8 | 0.75 | 0.75 | 0.75 | 0.65 | 0.65 | 0.65 | 0.65 | 0.55 | 0.55 | 0.55 | 0.55 | 0.55 |
| 4 L(mm) | 32 | 38 | 38 | 38 | 44 | 44 | 44 | 44 | 50 | 50 | 50 | 50 | 50 |
| 5 Weight g (oz) | 124 (4.373) | 145 (5.114) | 145 (5.114) | 145 (5.114) | 175 (6.172) | 175 (6.172) | 175 (6.172) | 175 (6.172) | 205 (7.231) | 205 (7.231) | 205 (7.231) | 205 (7.231) | 205 (7.231) |
| 6 Available with Motor - L2 = Length with motor (mm) | | | | | | | | | | | | | |
| **25GST82** | 75.5 | 81.5 | 81.5 | 81.5 | 87.5 | 87.5 | 87.5 | 87.5 | 93.5 | 93.5 | 93.5 | 93.5 | 93.5 |
| **25GT82** | 85.45 | 91.45 | 91.45 | 91.45 | 97.45 | 97.45 | 97.45 | 97.45 | 103.45 | 103.45 | 103.45 | 103.45 | 103.45 |
| **28L18/28** | 75.5 | 81.5 | 81.5 | 81.5 | 87.5 | 87.5 | 87.5 | 87.5 | 93.5 | 93.5 | 93.5 | 93.5 | 93.5 |
| **28LT12** | 73.2 | 79.2 | 79.2 | 79.2 | 85.2 | 85.2 | 85.2 | 85.2 | 91.2 | 91.2 | 91.2 | 91.2 | 91.2 |
| **28DT12** | 96.6 | 102.6 | 102.6 | 102.6 | 108.6 | 108.6 | 108.6 | 108.6 | 114.6 | 114.6 | 114.6 | 114.6 | 114.6 |
| **30GT82** | 94.9 | 100.9 | 100.9 | 100.9 | 106.9 | 106.9 | 106.9 | 106.9 | 112.9 | 112.9 | 112.9 | 112.9 | 112.9 |
| **35NT32/82** | 89.2 | 95.2 | 95.2 | 95.2 | 101.2 | 101.2 | 101.2 | 101.2 | 107.2 | 107.2 | 107.2 | 107.2 | 107.2 |
| **35GLT2R82** | 99.2 | 105.2 | 105.2 | 105.2 | 111.2 | 111.2 | 111.2 | 111.2 | 117.2 | 117.2 | 117.2 | 117.2 | 117.2 |
| **22ECT60** | 92 | 98 | 98 | 98 | 104 | 104 | 104 | 104 | 110 | 110 | 110 | 110 | 110 |
| **22ECT82** | 114 | 120 | 120 | 120 | 126 | 126 | 126 | 126 | 132 | 132 | 132 | 132 | 132 |

| Characteristics | | R32 2R • 0 • ···· |
|---|---|---|
| 7 Shaft Bearings | | Ball bearing |
| 8 Maximum Static Torque | Nm (oz-in) | 20 (2832) |
| 9 Maximum Radial Force | | |
| @ 8mm from mounting face | N (lb) | 180 (40.5) |
| 10 Maximum Axial Force | N (lb) | 150 (33.75) |
| 11 Maximum Press Fit Force | N (lb) | 500 (112.5) |
| 12 Average Backlash @ no-load | | 1° |
| 13 Average Backlash @ 0.3 Nm | | 2° |
| Shaft Play: | | |
| 14 -radial | µm | ≤ 10 |
| 15 -axial | µm | ≤ 10 |
| 16 Maximum Recommended Input Speed | rpm | 6000 |
| 17 Operating Temperature Range: | °C (°F) | -30 to +85 (-22 to +185) |

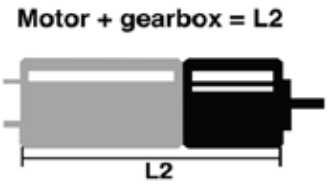


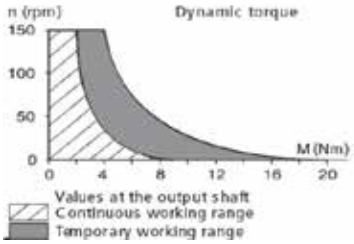


V121616

## R40 Planetary Gearbox ∅ 40mm 10 Nm

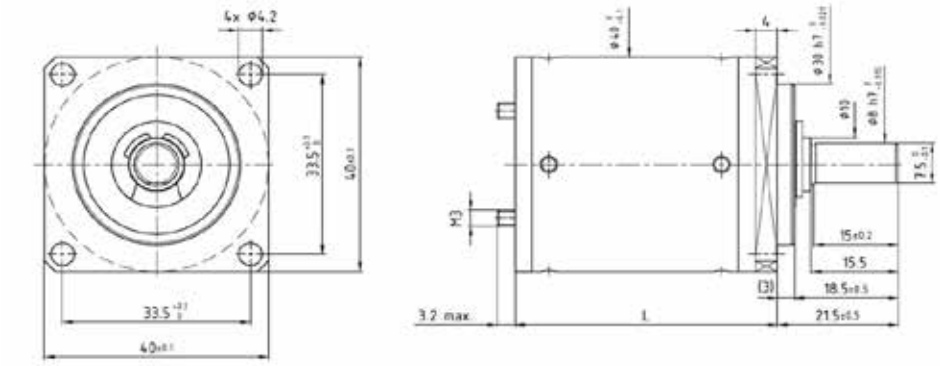


Dimensions in mm

| Ratio **** | | 3.56 | 5.6 | 15.2 | 24 | 54.2 | 85.3 | 134 | 193 | 303 | 478 | 753 |
|---|---|---|---|---|---|---|---|---|---|---|---|---|
| 1 | Number of Gear Stages | 1 | 1 | 2 | 2 | 3 | 3 | 3 | 4 | 4 | 4 | 4 |
| 2 | Direction of Rotation | = | = | = | = | = | = | = | = | = | = | = |
| 3 | Efficiency | 0.85 | 0.85 | 0.7 | 0.7 | 0.6 | 0.6 | 0.6 | 0.5 | 0.5 | 0.5 | 0.5 |
| 4 | L(mm) | 38.3 | 38.3 | 46.8 | 46.8 | 55.3 | 55.3 | 55.3 | 63.8 | 63.8 | 63.8 | 63.8 |
| 5 | Weight g (oz) | 245 (8.642) | 245 (8.642) | 285 (10.052) | 285 (10.052) | 340 (11.993) | 340 (11.993) | 340 (11.993) | 400 (14.109) | 400 (14.109) | 400 (14.109) | 400 (14.109) |
| 6 | Available with Motor - L2 = Length with motor (mm) | | | | | | | | | | | |
| | **25GT82** | 91.75 | 91.75 | 100.25 | 100.25 | 108.75 | 108.75 | 108.75 | 117.25 | 117.25 | 117.25 | 117.25 |
| | **28DT12** | 102.9 | 102.9 | 111.4 | 111.4 | 119.9 | 119.9 | 119.9 | 128.4 | 128.4 | 128.4 | 128.4 |
| | **30GT82** | 101.2 | 101.2 | 109.7 | 109.7 | 118.2 | 118.2 | 118.2 | 126.7 | 126.7 | 126.7 | 126.7 |
| | **35NT32/82** | 95.5 | 95.5 | 104 | 104 | 112.5 | 112.5 | 112.5 | 121 | 121 | 121 | 121 |
| | **35GLT82** | 105.5 | 105.5 | 114 | 114 | 122.5 | 122.5 | 122.5 | 131 | 131 | 131 | 131 |

| Characteristics | | | R40 • 0 • ···· |
|---|---|---|---|
| 7 | Shaft Bearings | | Ball Bearing |
| 8 | Maximum Static Torque | Nm (oz-in) | 40 (5700) |
| 9 | Maximum Radial Force | | |
| | @ 8mm from mounting face | N (lb) | 600 (135) |
| 10 | Maximum Axial Force | N (lb) | 400 (90) |
| 11 | Maximum Press Fit Force | N (lb) | 600 (135) |
| 12 | Average Backlash @ no-load | | 1° |
| 13 | Average Backlash @ 0.3 Nm | | 1.3° |
| | Shaft Play: | | |
| 14 | -radial | µm | ≤ 10 |
| 15 | -axial | µm | ≤ 10 |
| 16 | Maximum Recommended Input Speed | rpm | 6000 |
| 17 | Operating Temperature Range: | ℃ (℉) | -30 to +85 (-22 to +185) |

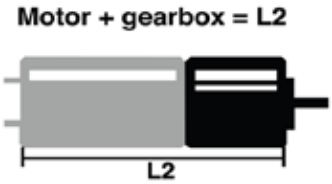


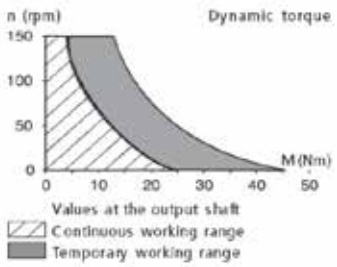


V121616

## D12

Integrated Magnetic Encoder

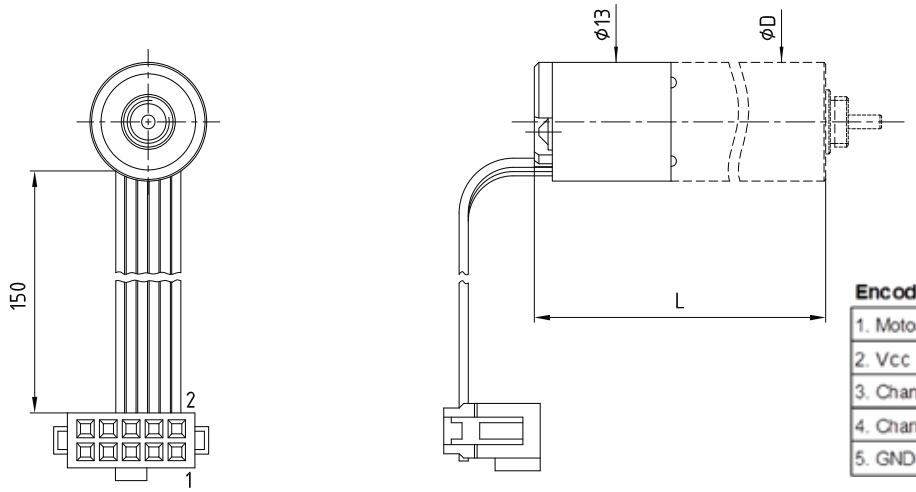


Dimensions in mm

**Encoder Type D connections**

| | |
|---|---|
| 1. Motor + | 6. Motor - |
| 2. Vcc | 7. NC |
| 3. Channel A | 8. NC |
| 4. Channel B | 9. NC |
| 5. GND | 10. NC |

| | | | Characteristics @ 22°C | |
|---|---|---|---|---|
| 1 | Number of Lines Available | | 12 | LPR |
| 2 | Supply Voltage | | 5 | Volt |
| 3 | Supply Current | Typcial | 4 | mA |
| | | Rise Time | 125 | ns |
| | | Fall Time | 50 | ns |
| 4 | Output Signal | | Two channels square wave | |
| 5 | Electrical Phase Shift | | 90 ± 40 | degree |
| 6 | Signal Ratio | | 50 ± 25 | % |
| 7 | Maximum Count Frequency | | 10 | kHz |
| 8 | Operating Temperature Range: | | -20 to +85 | °C (°F) |
| 9 | Code Wheel Moment of Inertia | | 0.1 | $10^{-7}$ x $kgm^2$ |
| 10 | Weight | | Varies by motor size. Contact us. | g (oz) |

| Available on motor types | 13N88 |
|---|---|
| Length with motor - mm (in) | 40.4 (1.59) |

Typical encoder output signal

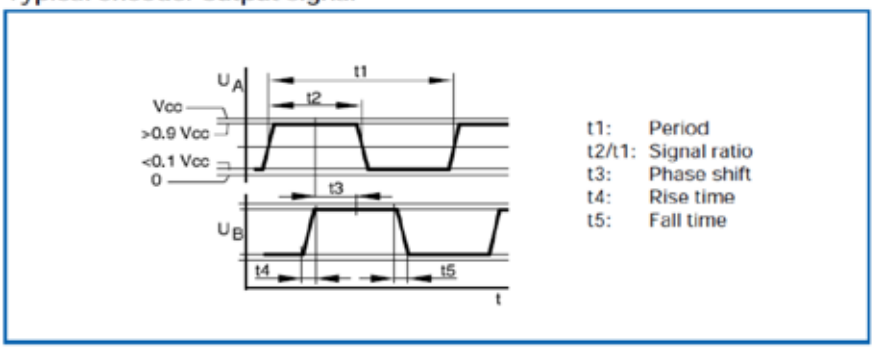


V121616

# D16

Integrated Magnetic Encoder

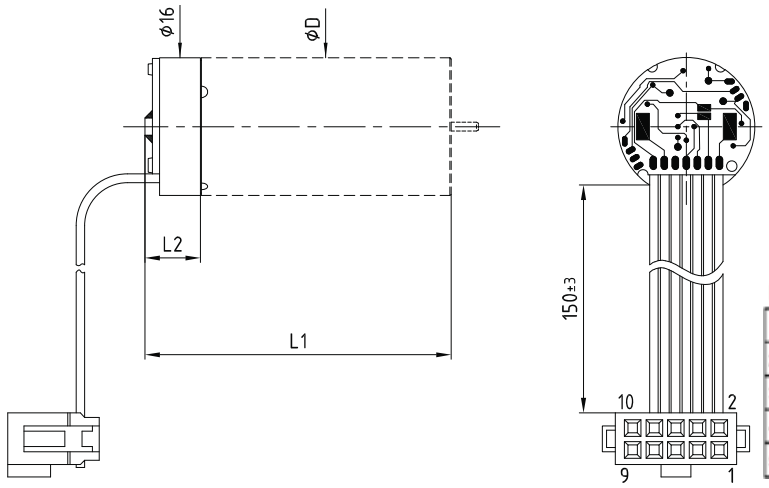


Dimensions in mm

**Encoder Type D connections**

| | |
|---|---|
| 1. Motor + | 6. Motor - |
| 2. Vcc | 7. Strobe |
| 3. Channel A | 8. NC |
| 4. Channel B | 9. NC |
| 5. GND | 10. NC |

| | | | Characteristics @ 22°C | |
|---|---|---|---|---|
| 1 | Number of Lines Available | | 16 | LPR |
| 2 | Supply Voltage | | 5 | Volt |
| 3 | Supply Current | Typcial | 4 | mA |
| | | Rise Time | 125 | ns |
| | | Fall Time | 50 | ns |
| 4 | Output Signal | | Two channels square wave | |
| 5 | Electrical Phase Shift | | 90 ± 40 | degree |
| 6 | Signal Ratio | | 50 ± 25 | % |
| 7 | Maximum Count Frequency | | 10 | kHz |
| 8 | Operating Temperature Range: | | -20 to +85 | °C (°F) |
| 9 | Code Wheel Moment of Inertia | | 0.1 | $10^{-7}$ x $kgm^2$ |
| 10 | Weight | | Varies by motor size. Contact us. | g (oz) |

| Available on motor types | 22N28 | 22V28 |
|---|---|---|
| Length with motor - mm (in) | 37.8 (1.49) | 40.1 (1.58) |

Typical encoder output signal

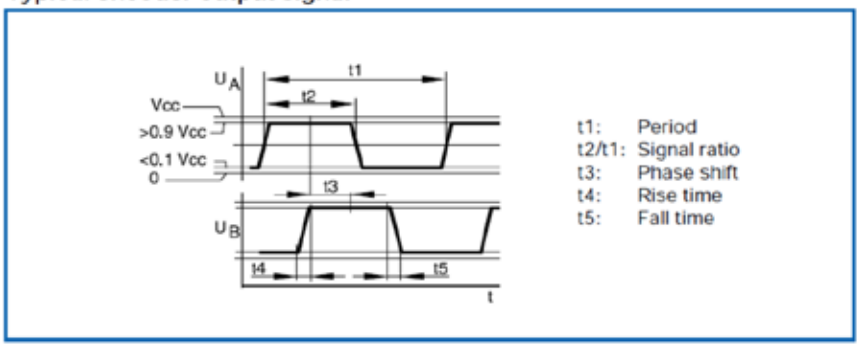


V121616

# E9

## 3 Channel Optical Encoder

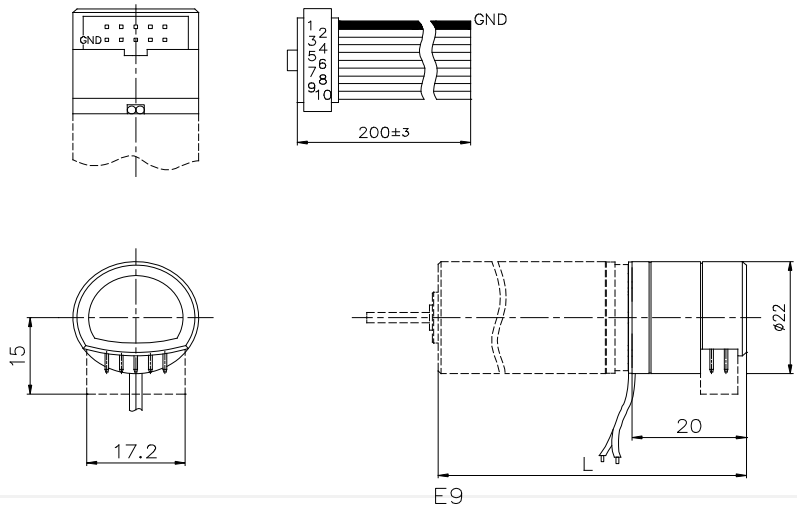


Dimensions in mm

| | Characteristics @ 22°C | | | |
|---|---|---|---|---|
| 1 | Number of Lines Available | | 100, 144, 200, 256, 300, 360, 500 (1), 512 (1) | LPR |
| 2 | Supply Voltage | | 5 ± 10% | Volt |
| 3 | Supply Current | Typical | 10 | mA |
| | | Maximum | 20 | mA |
| | | Stand-by | 50 | µA |
| 4 | Output Signal | | Compatible | CMOS |
| 5 | Electrical Phase Shift | | 90 ± 20 | degree |
| 6 | Duty Cycle | | 50 ± 10 | % |
| 7 | Maximum Count Frequency | | 200 | kHz |
| 8 | Operating Temperature Range: | | -40 to +85 | °C (°F) |
| 9 | Code Wheel Moment of Inertia | | 0.12 | $10^{-7}$ x $kgm^2$ |
| 10 | Weight | | 6.2 (0.22) | g (oz) |

| Available on motor types | 22N48 | 22V48 | 23LT12 | 23V48 | 23GST | 25GST | 25GT | 26N58 |
|---|---|---|---|---|---|---|---|---|
| Length with motor - mm (in) | 53.9 (2.13) | 56.2 (2.22) | 58 (2.29) | 59 (2.33) | 69.2 (2.33) | 63.7 (2.51) | 73.65 (2.9) | 62 (2.41) |

| Available on motor types | 28L28 | 28LT12 | 28DT12 | 30GT | 35NT | 35GLT |
|---|---|---|---|---|---|---|
| Length with motor - mm (in) | 61.5 (2.42) | 64.4(2.54) | 85.8 (3.38) | 88.3 (3.48) | 82.6 (3.25) | 92.6 (3.65) |

(1) Ask for the 2R (ball bearing type) motor for use with the E9 in 500 or 512 line version

### Features

- 2 channel quadrature ouput & index channel
- stand-by function with latched state of channels (to de-activate the stand-by mode, connect to the pin 4 to the +5V
- Compact size
- Complementary outputs
- up/down pulse signals (on reuquest)
- Single 5vdc supply
- intergrated direction of rotation dectection
- CMOS capatible the input Stand-by has to be connected to 0vdc or + 5vdc

### Typical encoder output signal

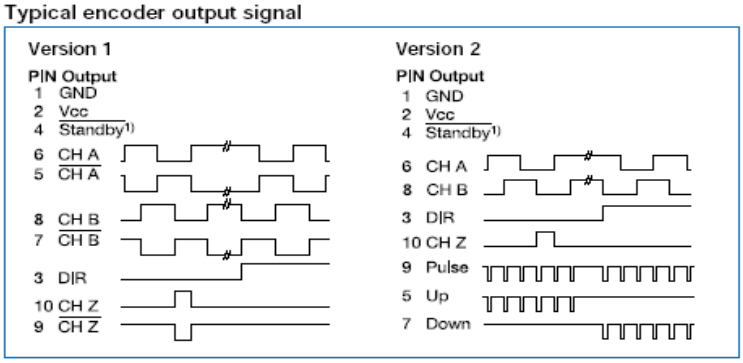


V121616

# F16

Integrated Magnetic Encoder

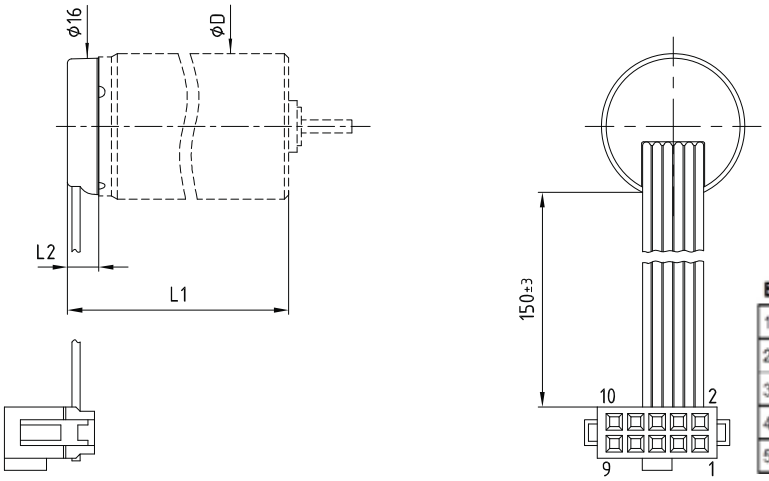


Dimensions in mm

**Encoder Type F connections**

| | |
|---|---|
| 1. Motor + | 6. Motor - |
| 2. Vcc | 7. NC |
| 3. Channel A | 8. NC |
| 4. Channel B | 9. NC |
| 5. GND | 10. NC |

| | | | Characteristics @ 22°C | |
|---|---|---|---|---|
| 1 | Number of Lines Available | | 16 | LPR |
| 2 | Supply Voltage | | 3.5 to 15 | Volt |
| 3 | Supply Current | Typcial | 6 | mA |
| | | Rise Time | 5 | µs |
| | | Fall Time | 0.2 | µs |
| 4 | Output Signal | | Two channels square wave | |
| 5 | Electrical Phase Shift | | 90 ± 40 | degree |
| 6 | Signal Ratio | | 50 ± 25 | % |
| 7 | Maximum Count Frequency | | 15 | kHz |
| 8 | Operating Temperature Range: | | -20 to +85 | °C (°F) |
| 9 | Code Wheel Moment of Inertia | | 0.1 | $10^{-7}$ x $kgm^2$ |
| 10 | Weight | | Varies by motor size. Contact us. | g (oz) |

| Available on motor types | 16C 18 | 16N28 | 17S78 | 17N78 | 22N28 | 22V28 |
|---|---|---|---|---|---|---|
| Length with motor - mm (in) | 18.6 (0.73) | 30 (1.18) | 20.2 (0.795) | 27.8 (1.09) | 34 (1.34) | 36.3 (1.43) |

Typical encoder output signal

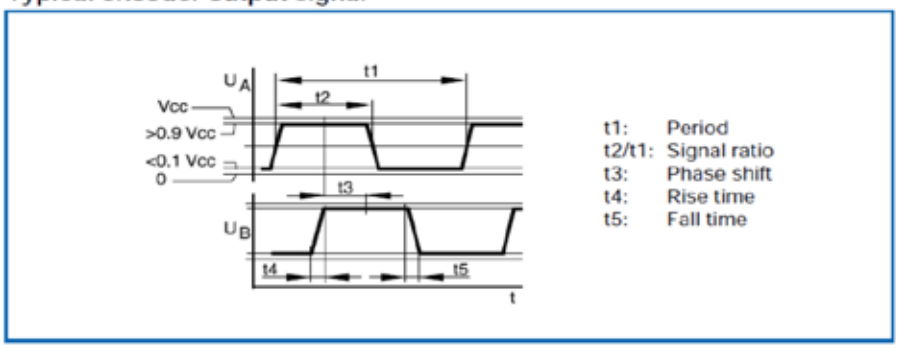


V121616

## HEDS 5500/5540

Optical Encoder

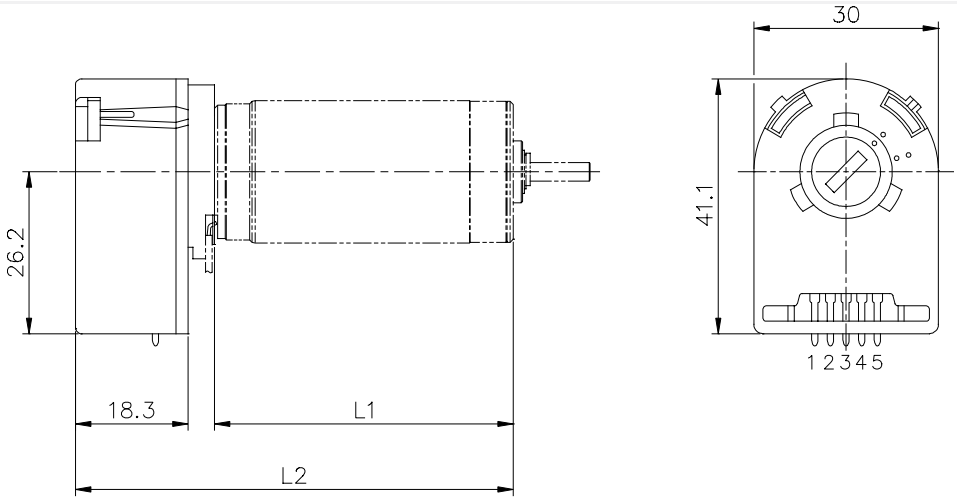


Dimensions in mm

| | Characteristics @ 22°C | | | |
|---|---|---|---|---|
| 1 | Number of Lines Available | | 96 to 1024 | LPR |
| 2 | Supply Voltage | | 5 ± 10% | Volt |
| 3 | Supply Current | Typcial | 17 - 57 | mA |
| 4 | Output Signal | | 2 channels, square wave in quadrature 3 Channels (with index) | CMOS |
| 5 | Electrical Phase Shift | | 90 ± 10 | degree |
| 6 | Maximum Count Frequency | | 100 | kHz |
| 7 | Operating Temperature Range: | | -40 to +100 | °C (°F) |
| 8 | Code Wheel Moment of Inertia | | 0.6 X 10-7 | $10^{-7}$ x $kgm^2$ |
| 9 | Weight | | 17 | g (oz) |

| Available on motor types | 22N48 | 22N98 | 22V48 | 23GST | 26N48 | 28LT12 | 28D11 | 28DT12 |
|---|---|---|---|---|---|---|---|---|
| Length with motor - mm (in) | 54.9 (2.16) | 54.9 (2.16) | 57.2 (2.25) | 58.6 (2.31) | 63 (2.48) | 63.8 (2.51) | 82.1 (3.23) | 85.2 (3.35) |

| Available on motor types | 35NT |
|---|---|
| Length with motor - mm (in) | 83.45 (3.29) |

*On request, encoder available on other motors. Encoder also available with line-driver.

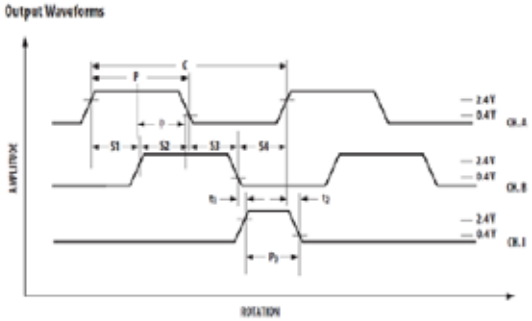


**Phase (φ):**This value is nominally 90°e for quadrature output.
**Index Pulse Width (PO)**: This value is nominally 90°e or 1/4 cycle.
**State Width (S):**Each state is nominally 90°e
**Pulse Width (P):**This value is nominally 180°e or 1/2 cycle.
**One Cycle (C):**360 electrical degrees (°e), 1 bar and window pair
**Channel I rising time (t1):** The value is nominally 100 ns
**Channel I falling time (t2):**The value is nominally 150 ns

V121616

# MR2

Magneto Resistive Encoder

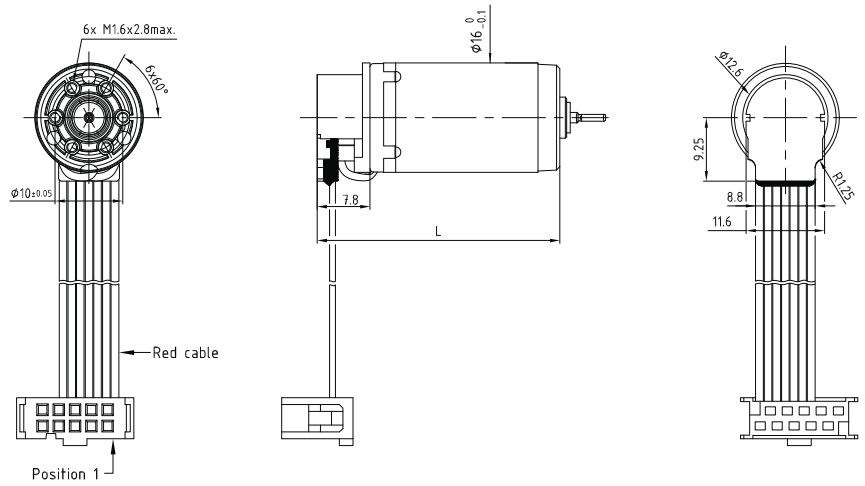


Dimensions in mm

| | Characteristics @ 22°C | | | |
|---|---|---|---|---|
| 1 | Number of Lines Available | | 512, 500, 400, 256, 250, 200, 160, 128, 100, 80, 64, 50, 40, 32, 20, 16, 8, 4 | LPR |
| 2 | Supply Voltage | | 5 ± 10% | Volt |
| 3 | Supply Current | Typical / Max | 20/25 | mA |
| | | Rise Time | 60 | ns |
| | | Fall Time | 60 | ns |
| 4 | Maximum Count Frequency | | 1.28 | MHz |
| 5 | Electrical Phase Shift | | 90 ± 45 | degree |
| 6 | Duty Cycle | | 50 ± 15 | % |
| 7 | Maximum Speed @ 512 | | 37,500 | rpm |
| 8 | Operating Temperature Range: | | -25 to +85 | °C (°F) |
| 9 | Weight | | Varies by motor size. Contact us. | g (oz) |

| Available on motor types | 12G88 | 13N88 | 16G88 | 16N48 | 16N98 | 17S98 | 17N98 | 22N48 |
|---|---|---|---|---|---|---|---|---|
| Length with motor - mm (in) | 33.8 (1.33) | 34.35 (1.35) | 35.8 (1.41) | 33.2 (1.31) | 33.2 (1.31) | 23.9 (0.94) | 31.1 (1.22) | 39.35 (1.55) |

| Available on motor types | 22N98 | 22V48 | 25GST |
|---|---|---|---|
| Length with motor - mm (in) | 39.35 (1.55) | 41.65 (1.64) | 53.9 (2.12) |

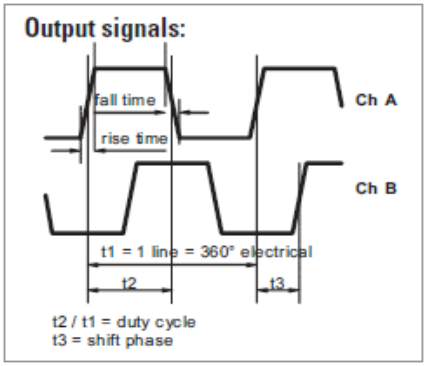


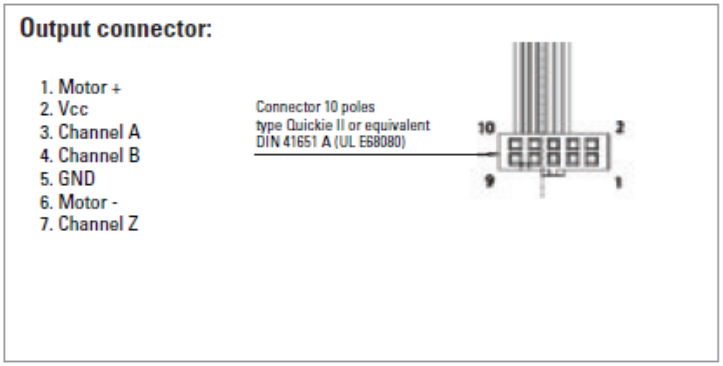


V121616

## M Sense B

Magnetic Encoder with RS422 Line Driver

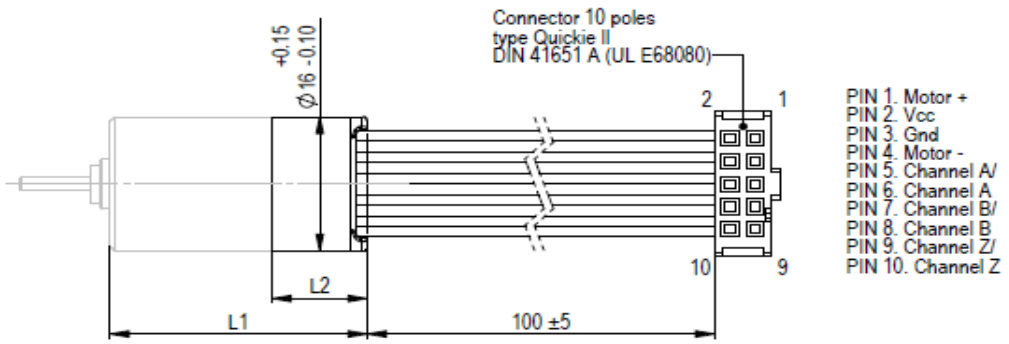


Dimensions in mm

| | Characteristics @ 22°C & 5000 rpm | | | | |
|---|---|---|---|---|---|
| 1 | Number of Lines Available | | 1024, 512, 256, 128..1 | | LPR |
| 2 | Supply Voltage | | 4.5 / 5.5 | | Volt |
| 3 | Supply Current | Typical / Max | 16/23 | | mA |
| 4 | Rise/Fall time (CL=50pF) | Max | 60 | | ns |
| 5 | Output Frequency | | 0.5 | | MHz |
| 6 | Electrical Phase Shift | | 90 ± 45 up to 256 ppr | 90 ± 75 for 512 & 1024 ppr | degree |
| 7 | Duty Cycle | | 50 ± 15 up to 256 ppr | 50 ± 25 for 512 & 1024 ppr | % |
| 8 | INL (Integral Non Linearity) | Max | 1.5 | | degree |
| 9 | Maximum Speed @ 1024ppr | Max | 30,000 | | rpm |
| 10 | Line Driver Parameters | | 4mA / 10MHz (default configuration) | | |
| 11 | Cable Type | | AWG28 Ribbon cable pitch 1.27mm | | |
| 12 | Operating Temperature Range | Min / Max | -40 to +100 | | °C |
| 13 | Weight | | Varies by motor size. Contact us. | | g (oz) |

| Available on motor types | | 16S78 | 16N48 | 16N98 | 17N78 | 22S48 | 22N48 | 22N98 |
|---|---|---|---|---|---|---|---|---|
| L1 | Length with motor - mm (in) | 27.1 (1.07) | 27.1 (1.07) | 36.4(1.43) | 34.4 (1.35) | 36.6 (1.44) | 46.4 (1.83) | 46.4 (1.83) |
| L2 | Length of encoder - mm (in) | 10 (0.39) | 10 (0.39) | 10 (0.40) | 10 (0.40) | 9.45 (0.38) | 13.1 (0.52) | 13.1 (0.52) |

| Available on motor types | | 30GT | P110 | 23GST | 25GST | 35NT | 35GLT |
|---|---|---|---|---|---|---|---|
| L1 | Length with motor - mm (in) | ** | 32.4 (1.28) | ** | ** | ** | ** |
| L2 | Length of encoder - mm (in) | ** | 13.6 (0.54) | ** | ** | ** | ** |

| Available on motor types | | 16ECP36 | 16ECP52 | 22DCP |
|---|---|---|---|---|
| L1 | Length with motor - mm (in) | ** | ** | ** |
| L2 | Length of encoder - mm (in) | ** | ** | ** |

** Available on request

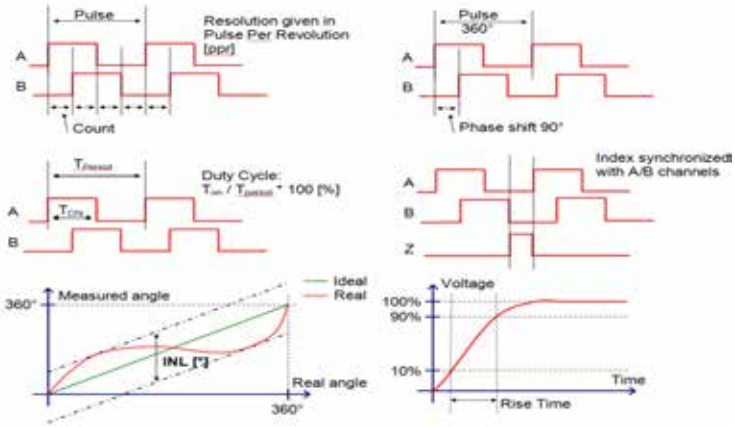


Encoder performance option available on request (contact us):

Optional Line driver type: 4mA-10MHz (default) / 50mA-10MHz / 50mA-300kHz / 20mA-3MHz. 4mA-10MHz is recommanded for use as single ended outputs. Other options are dedicated for use of differential outputs.

Other parameters can be customized: Index synchronization mode, minimal edge distance, direction of rotation, low current mode and other.

V121616

**North America**
110 Westtown Road
West Chester, Pennsylvania 19382
Tel: +1 610 235 5499
Fax: +1 610 696 4598
sales.america@portescap.com
portescap.com

**South America**
Avenida Tamboré, 1077
Barueri – São Paolo - Brazil
06460-914
Tel: +55 11 3616 0199
vendas@portescap.com
portescap.com.br

**Europe**
Portescap S.A.
Rue Jardinière 155, Case Postale
CH-2301 La Chaux-de-Fonds
Switzerland
Tel: +41 32 925 62 34
Fax: +41 32 925 62 88
sales.europe@portescap.com
portescap.de

**China**
4th Floor, Building 9, No 518
North Fuquan Road,
Changning District
Shanghai, 200335
Tel: +86 21 8028 1516
Fax: +86 21 8028 1600
sales.asia@portescap.com
portescapmotor.cn

**Japan**
Portescap Co., Ltd.
Shinagawa INTERCITY, Tower B 7F
2-15-2, Konan Minato-ku
Tokyo 108-6107
Tel: +81 3 5479 7701
Fax: +81 3 5479 8232
sales.asia@portescap.com
portescap.co.jp

**Korea**
#401, Hankuk scout building, 18-3
Yeouido-dong, Yeongdeungpo-gu
Seoul, 150-914, Korea
Tel: +82 2 6917 5077
sales.asia@portescap.com
portescap.kr

**India**
Portescap India Pvt. Ltd.
Unit No. 2, SDF-1, SEEPZ-SEZ
Andheri (E), Mumbai - 400096 India
Tel: +91 22 4200 6200, +91 22 4200 6201
Fax: +91 22 4200 4036
sales.asia@portescap.com
portescap.com

Portescap



Lit code: 0180 V122016Eng