Portescap

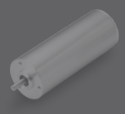
Brushless dc motors

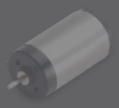
Brush dc motors

Disc magnet motors

Can stack motors

Can stack linear actuators

Gearheads

Encoders

ROSIER MECATRONIQUE
L'ARCHITECTE DE VOS MOUVEMENTS

Tél.04 72 04 68 61
www.rosier.fr

ACTIONNEUR ET VÉRIN ÉLECTRIQUES MOTORISATION AXE LINEAIRE COMMANDE D'AXES ROBOT CARTÉSIEN SCARA 6 AXES

Disc Magnet Motors

Get the simple motion control and precision of a stepper motor with the speed and acceleration of a brushless DC motor. The unique thin disc magnet enables finer step resolutions compared to a conventional permanent magnet stepper, while the low inertia and a shorter magnetic circuit with lower iron losses deliver significantly higher acceleration and maximum speed. These motors can be driven as a servo motor in applications requiring extremely fast incremental motion.

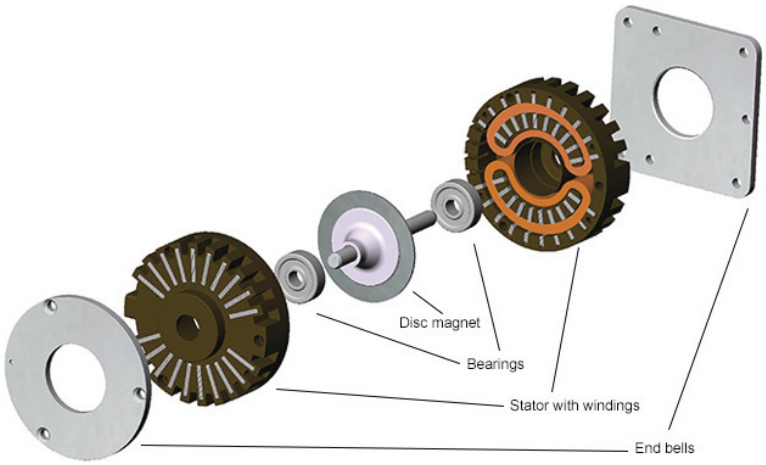

Simple Speed, Power and Precision

Feature	Details	Application Advantages
Stepper motor design	• No need for encoder feedback	• Simple open-loop positioning that can be digitally controlled
Microstepping capability	• Axial magnetization with high number of poles • Much smaller step angles compared to conventional stepper	• Nearly servo-like accuracy in a simpler positioning system
Thin multipolar rare earth disc magnet	• Low rotor inertia	• High acceleration • High start and stop frequencies • High power rate
Simple magnetic circuit	• No coupling between phases • Sinusoidal torque function • Low detent torque	• Superior angular resolution in microstep mode
Optimally dimensioned iron circuit	• Torque constant linear up to two times nominal current	• High peak torques • Capability to boost current
Choice of sintered bronze bearings or ball bearings	• Long bearing and lubrication life • Choice of bearing performance characteristics	• Increased service life and reliability for any application

V092018 • © 2018 Portescap. Specifications subject to change without notice.

Exceptional Dynamic Performance

Medical devices & clinical diagnostics
- Laboratory automation
- Medical pipettes
- Diagnostic analyzers
- Medical analyzers
- Sample preparation workstations

Security
- Access systems
- Surveillance

Aerospace
- Surveillance camera systems
- Valve actuation

Automation
- Textile yarn guide
- Pick and place machines

Other
- Electronics assembly
- Semiconductor assembly systems

Meet your Application's Working Point Requirements

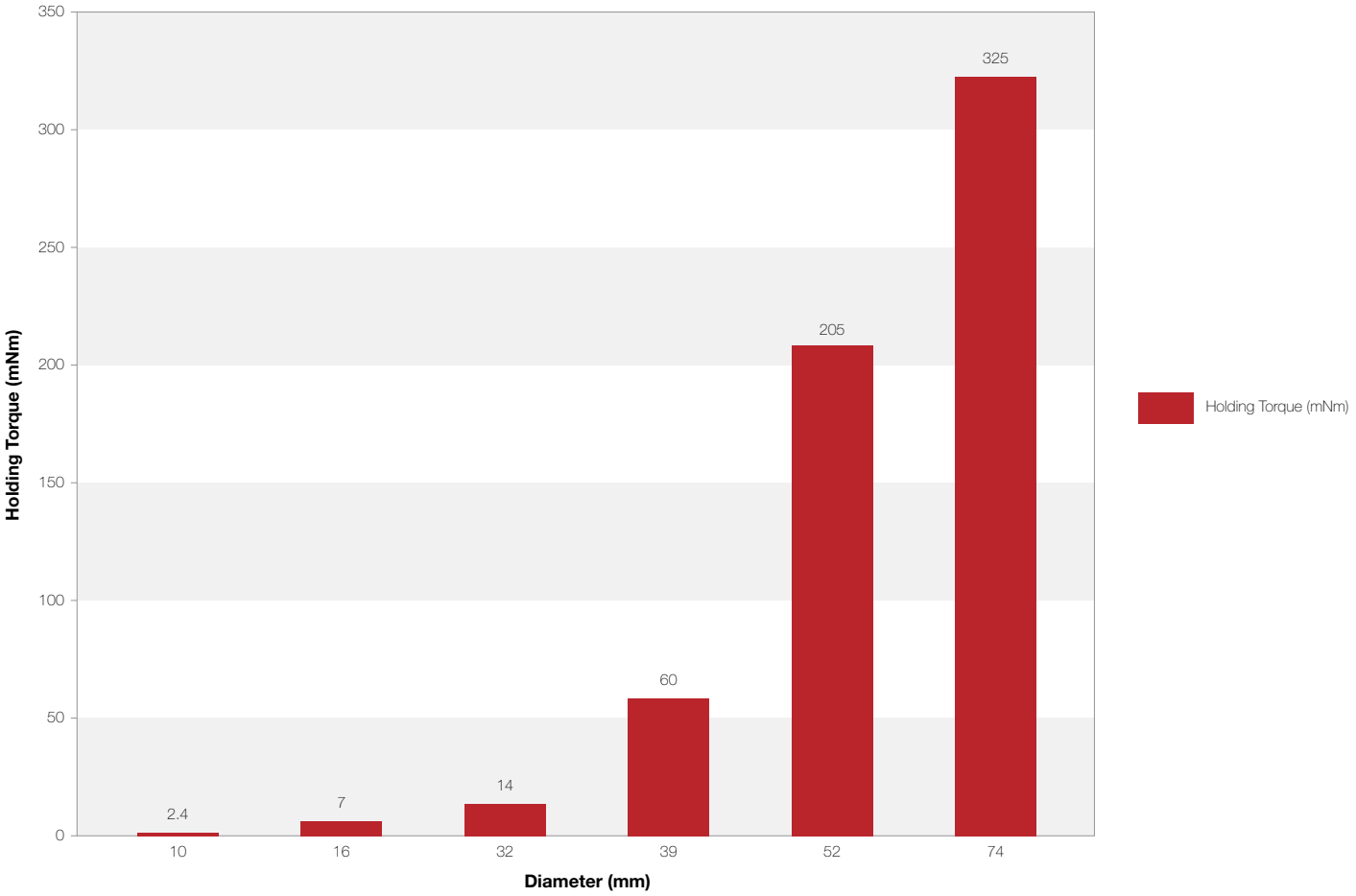

For complete product and application details, visit **portescap.com/disc-magnet**

P010 104 (Upon Request)

Ø 10 mm • 1.5 mNm

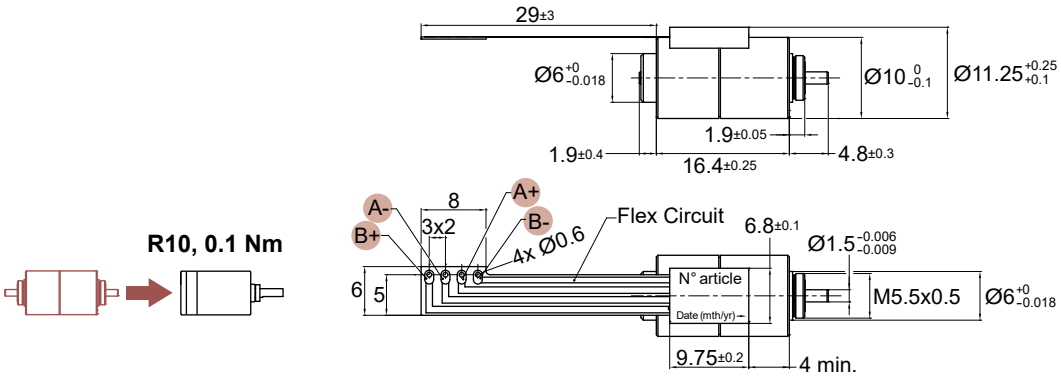

Dimensions in mm.

Electrical Data		P010 104 020 21	P010 104 003 21	Unit
1	Resistance per Phase, typ	19.0	3.0	Ohms
2	Inductance per Phase, typ	13.7	1.8	mH
3	Nominal Phase Current (2 ph. On)	0.15	0.37	A
4	Nominal Phase Current (1 ph. On)	0.21	0.52	A
5	Back EMF Amplitude	1.10	0.46	V/kstep/s

General Data			
6	Holding Torque, nominal current	1.5 (0.21)	mNm (oz-in)
7	Holding Torque, 1.5x nominal current (1)	2.1 (0.3)	mNm (oz-in)
8	Detent Torque	0.9 (0.13)	mNm (oz-in)
9	Rotor Inertia	0.070	kgm2 x 10-7
10	Step Angle	9	Degree
11	Absolute Accuracy 2 ph. On, Full step mode	+/- 5%	% Full Step
12	Steps Per Revolution	40	
13	Ambient Temperature Range (operating)	-20 to 50 (-4 to 122)	°C (°F)
14	Maximum Coil Temperature	130 (266)	°C (°F)
15	Thermal Resistance Coil-ambient (2)	100	°C/W
16	Natural Resonance Frequency (nominal current)	230	Hz
17	Electrical Time Constant	0.60	ms
18	Angular Acceleration (nominal current)	210,000	rad/s2
19	Bearing Type	Ball	
20	Dielectric Withstanding Voltage	500 VRMS for 5 seconds	VAC
21	Radial Shaft Play	30 @ 2N	µm
22	Axial Shaft Play	40 @ 2N	µm
23	Maximum Radial Shaft Load	2.5 (9)	N (oz)
24	Maximum Axial Shaft Load (3)	2.5 (9)	N (oz)
25	Weight	9 (0.32)	g (oz)
26	Power Rate (nominal current)	0.5	kW/s

Notes:
1. Measured with 1 phase ON. The max coil temperature must be respected
2. Motor unmounted
3. Shaft must be supported when press-fitting a pulley or pinion

Turbo Disc P010 104 003 Torque vs Speed (full step bipolar drive)

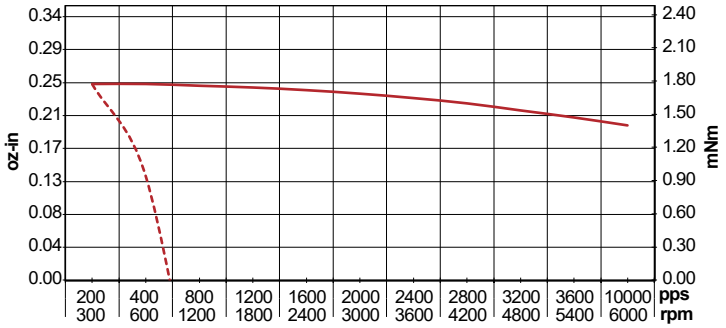

—P010 104 003 Pull-Out Torque @ 0.6A, 12V -- P010 104 003 Pull-In Torque @ 0.6A, 12V

V092018 • © 2018 Portescap. Specifications subject to change without notice.

P010 064 (Upon Request)

Ø 10 mm • 1.8 mNm

R10, 0.1 Nm

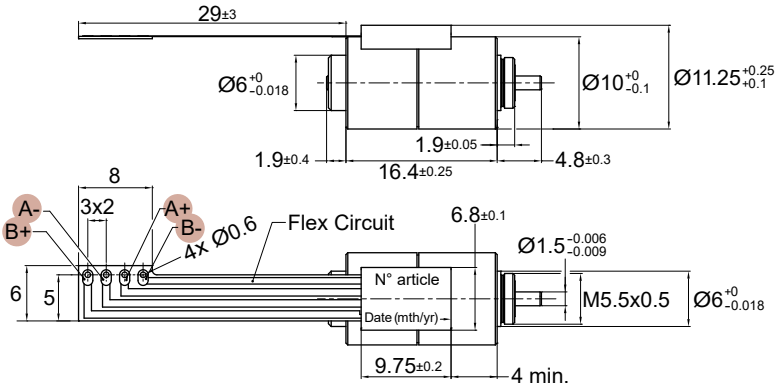

Dimensions in mm.

Electrical Data	P010 064 020 21	P010 064 003 21	Unit
1 Resistance per Phase, typ	19.0	3.0	Ohms
2 Inductance per Phase, typ	13.7	1.8	mH
3 Nominal Phase Current (2 ph. On)	0.15	0.37	A
4 Nominal Phase Current (1 ph. On)	0.21	0.52	A
5 Back EMF Amplitude	2.20	0.94	V/kstep/s

General Data		
6 Holding Torque, nominal current	1.8 (0.25)	mNm (oz-in)
7 Holding Torque, 1.5x nominal current (1)	2.5 (0.35)	mNm (oz-in)
8 Detent Torque	0.9 (0.13)	mNm (oz-in)
9 Rotor Inertia	0.070	kgm2 x 10-7
10 Step Angle	15	Degree
11 Absolute Accuracy 2 ph. On, Full step mode	+/- 5%	% Full Step
12 Steps Per Revolution	24	
13 Ambient Temperature Range (operating)	-20 to 50 (-4 to 122)	°C (°F)
14 Maximum Coil Temperature	130 (266)	°C (°F)
15 Thermal Resistance Coil-ambient (2)	100	°C/W
16 Natural Resonance Frequency (nominal current)	200	Hz
17 Electrical Time Constant	0.60	ms
18 Angular Acceleration (nominal current)	260,000	rad/s2
19 Bearing Type	Ball	
20 Dielectric Withstanding Voltage	500 VRMS for 5 seconds	VAC
21 Radial Shaft Play	30 @ 2N	µm
22 Axial Shaft Play	40 @ 2N	µm
23 Maximum Radial Shaft Load	2.5 (9)	N (oz)
24 Maximum Axial Shaft Load (3)	2.5 (9)	N (oz)
25 Weight	9 (0.32)	g (oz)
26 Power Rate (nominal current)	0.5	kW/s

Notes:
1. Measured with 1 phase ON. The max coil temperature must be respected
2. Motor unmounted
3. Shaft must be supported when press-fitting a pulley or pinion

Turbo Disc P010 064 003 Torque vs Speed (full step bipolar drive)

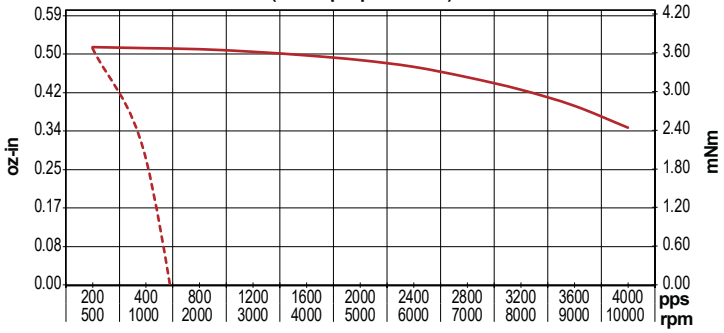

—P010 064 003 Pull-Out Torque @ 0.6A, 12V - - P010 064 003 Pull-In Torque @ 0.6A, 12V

PH010 104 (Upon Request)

Ø 10 mm • 2.1 mNm

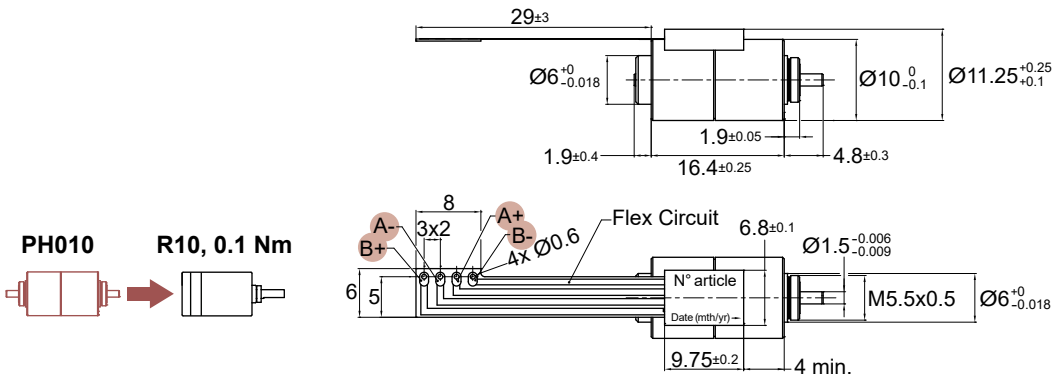

Dimensions in mm.

Electrical Data		PH010 104 020 02	PH010 104 010 02	PH010 104 003 02	Unit
1	Resistance per Phase, typ	19.0	10.0	3.0	Ohms
2	Inductance per Phase, typ	8.4	4.2	1.3	mH
3	Nominal Phase Current (2 ph. On)	0.15	0.20	0.37	A
4	Nominal Phase Current (1 ph. On)	0.21	0.28	0.52	A
5	Back EMF Amplitude	1.58	1.18	0.64	V/kstep/s

General Data			
6	Holding Torque, nominal current	2.1 (0.3)	mNm (oz-in)
7	Holding Torque, 1.5x nominal current (1)	3.16 (0.45)	mNm (oz-in)
8	Detent Torque	1 (0.14)	mNm (oz-in)
9	Rotor Inertia	0.070	kgm2 x 10-7
10	Step Angle	9	Degree
11	Absolute Accuracy 2 ph. On, Full step mode	+/- 5%	% Full Step
12	Steps Per Revolution	40	
13	Ambient Temperature Range (operating)	-20 to 50 (-4 to 122)	°C (°F)
14	Maximum Coil Temperature	130 (266)	°C (°F)
15	Thermal Resistance Coil-ambient (2)	100	°C/W
16	Natural Resonance Frequency (nominal current)	276	Hz
17	Electrical Time Constant	0.42	ms
18	Angular Acceleration (nominal current)	301,758	rad/s2
19	Bearing Type	Ball	
20	Dielectric Withstanding Voltage	500 VRMS for 5 seconds	VAC
21	Radial Shaft Play	30@2N	µm
22	Axial Shaft Play	40@2N	µm
23	Maximum Radial Shaft Load	2.5 (9)	N (oz)
24	Maximum Axial Shaft Load (3)	2.5 (9)	N (oz)
25	Weight	9 (0.32)	g (oz)
26	Power Rate (nominal current)	0.5	kW/s

Notes:
1. Measured with 1 phase ON. The max coil temperature must be respected
2. Motor unmounted
3. Shaft must be supported when press-fitting a pulley or pinion

Turbo Disc PH010 104 003 Torque vs Speed (full step bipolar drive)

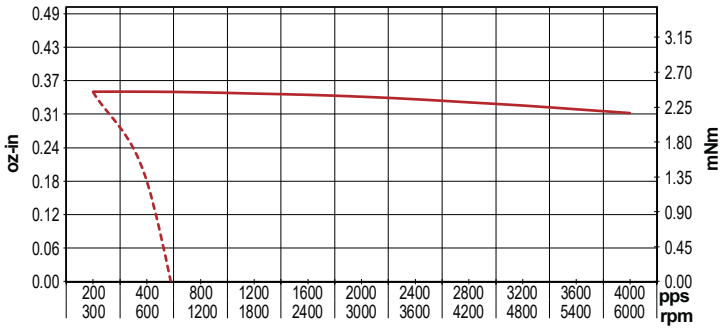

—PH010 104 003 Pull-Out Torque @ 0.6A, 12V - - PH010 104 003 Pull-In Torque @ 0.6A, 12V

V092018 • © 2018 Portescap. Specifications subject to change without notice.

PH010 064 (Upon Request)

Ø 10 mm • 2.4 mNm

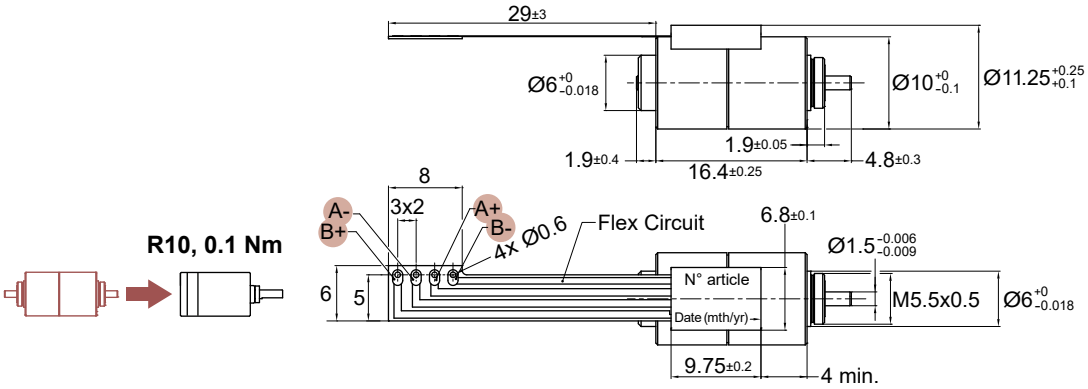

Dimensions in mm.

Electrical Data		PH010 064 020 20	PH010 064 010 02	PH010 064 003 02	Unit
1	Resistance per Phase, typ	19.0	10.0	3.0	Ohms
2	Inductance per Phase, typ	8.4	4.2	1.3	mH
3	Nominal Phase Current (2 ph. On)	0.15	0.20	0.37	A
4	Nominal Phase Current (1 ph. On)	0.21	0.28	0.52	A
5	Back EMF Amplitude	3.00	2.25	1.21	V/kstep/s

General Data			
6	Holding Torque, nominal current	2.4 (0.34)	mNm (oz-in)
7	Holding Torque, 1.5x nominal current (1)	3.6 (0.51)	mNm (oz-in)
8	Detent Torque	1.1 (0.16)	mNm (oz-in)
9	Rotor Inertia	0.070	kgm2 x 10-7
10	Step Angle	15	Degree
11	Absolute Accuracy 2 ph. On, Full step mode	+/- 5%	% Full Step
12	Steps Per Revolution	24	
13	Ambient Temperature Range (operating)	-20 to 50 (-4 to 122)	°C (°F)
14	Maximum Coil Temperature	130 (266)	°C (°F)
15	Thermal Resistance Coil-ambient (2)	100	°C/W
16	Natural Resonance Frequency (nominal current)	229	Hz
17	Electrical Time Constant	0.42	ms
18	Angular Acceleration (nominal current)	343,775	rad/s2
19	Bearing Type	Ball	
20	Dielectric Withstanding Voltage	500 VRMS for 5 seconds	VAC
21	Radial Shaft Play	30@2N	µm
22	Axial Shaft Play	40@2N	µm
23	Maximum Radial Shaft Load	2.5 (9)	N (oz)
24	Maximum Axial Shaft Load (3)	2.5 (9)	N (oz)
25	Weight	9 (0.32)	g (oz)
26	Power Rate (nominal current)	0.5	kW/s

Notes:
1. Measured with 1 phase ON. The max coil temperature must be respected
2. Motor unmounted
3. Shaft must be supported when press-fitting a pulley or pinion

Turbo Disc PH010 064 003 Torque vs Speed (full step bipolar drive)

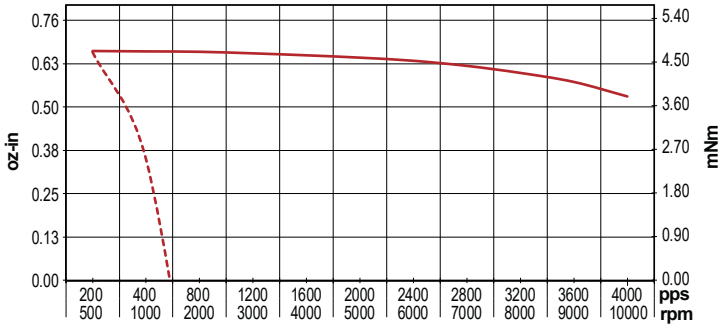

—PH010 064 003 Pull-Out Torque @ 0.6A, 12V - - PH010 064 003 Pull-In Torque @ 0.6A, 12V

P110 104

Ø 16 mm • 6.2 mNm

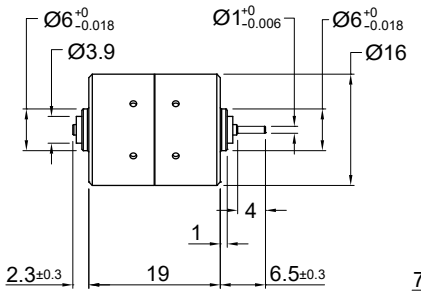

P110 104 . . . 08

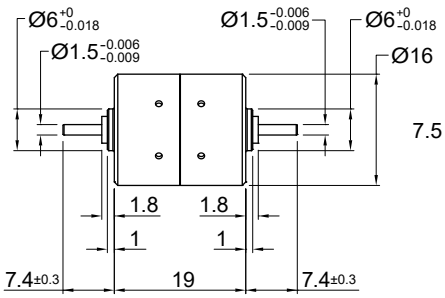

P110 104 . . . 12

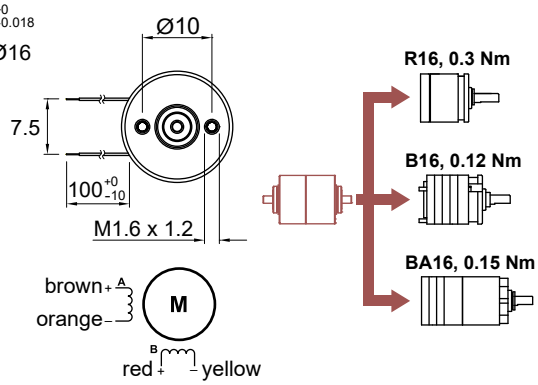

Dimensions in mm.

	Electrical Data	P110 104 068 08/12	P110 104 015 08/12	P110 104 2.5 08/12	Unit
1	Resistance per Phase, typ	62.0	15.0	2.5	Ohms
2	Inductance per Phase, typ	46.0	12.0	2.2	mH
3	Nominal Phase Current (2 ph. On)	0.12	0.25	0.63	A
4	Nominal Phase Current (1 ph. On)	0.17	0.35	0.90	A
5	Back EMF Amplitude	5.70	2.80	1.10	V/kstep/s

	General Data		
6	Holding Torque, nominal current	6.2 (0.88)	mNm (oz-in)
7	Holding Torque, 1.5x nominal current (1)	8.7 (1.23)	mNm (oz-in)
8	Detent Torque	1.65 (0.24)	mNm (oz-in)
9	Rotor Inertia	0.400	$kgm^2 \times 10^{-7}$
10	Step Angle	9	Degree
11	Absolute Accuracy 2 ph. On, Full step mode	+/- 5%	% Full Step
12	Steps Per Revolution	40	
13	Ambient Temperature Range (operating)	-20 to 50 (-4 to 122)	°C (°F)
14	Maximum Coil Temperature	130 (266)	°C (°F)
15	Thermal Resistance Coil-ambient (2)	45	°C/W
16	Natural Resonance Frequency (nominal current)	200	Hz
17	Electrical Time Constant	0.80	ms
18	Angular Acceleration (nominal current)	155,000	rad/s^2
19	Bearing Type	Ball	
20	Dielectric Withstanding Voltage	500 VRMS for 5 seconds	VAC
21	Radial Shaft Play	30@2N	µm
22	Axial Shaft Play	40@2N	µm
23	Maximum Radial Shaft Load	2.5 (9)	N (oz)
24	Maximum Axial Shaft Load (3)	2.5 (9)	N (oz)
25	Weight	23 (0.81)	g (oz)
26	Power Rate (nominal current)	1.2	kW/s

Notes:
1. Measured with 1 phase ON. The max coil temperature must be respected
2. Motor unmounted
3. Shaft must be supported when press-fitting a pulley or pinion

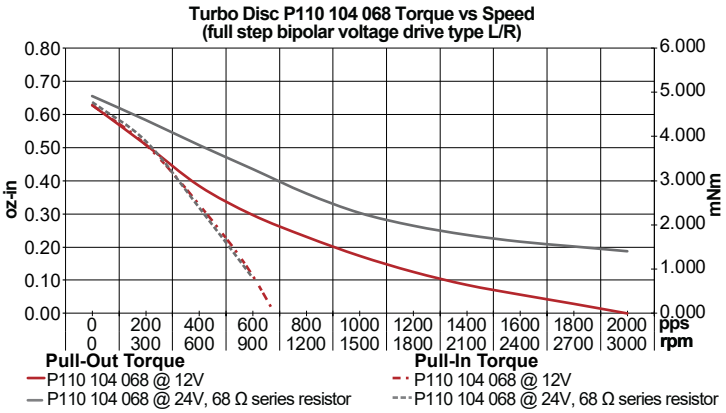

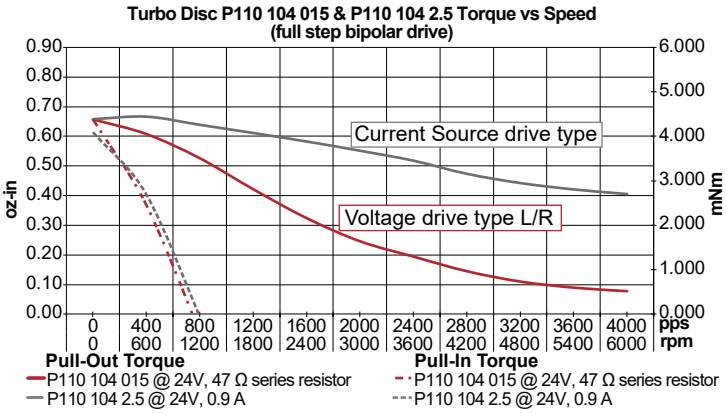

V092018 • © 2018 Portescap. Specifications subject to change without notice.

P110 064

Ø 16 mm • 7 mNm

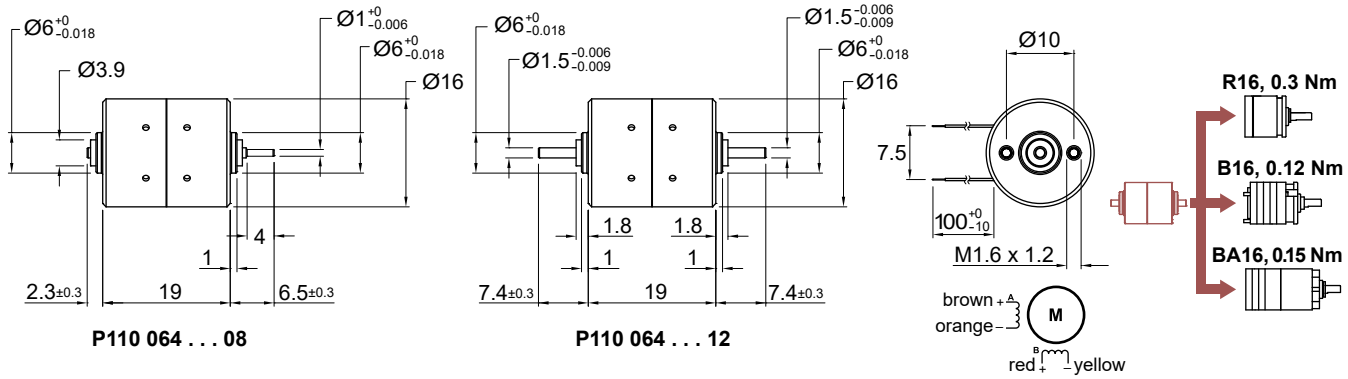

Dimensions in mm.

Electrical Data		P110 064 068 08/12	P110 064 015 08/12	P110 064 2.5 08/12	Unit
1	Resistance per Phase, typ	62.0	15.0	2.5	Ohms
2	Inductance per Phase, typ	46.0	12.0	2.2	mH
3	Nominal Phase Current (2 ph. On)	0.12	0.25	0.63	A
4	Nominal Phase Current (1 ph. On)	0.17	0.35	0.90	A
5	Back EMF Amplitude	10.80	5.20	2.00	V/kstep/s

General Data			
6	Holding Torque, nominal current	7 (0.99)	mNm (oz-in)
7	Holding Torque, 1.5x nominal current (1)	10 (1.42)	mNm (oz-in)
8	Detent Torque	1.65 (0.24)	mNm (oz-in)
9	Rotor Inertia	0.400	$kgm^2 \times 10^{-7}$
10	Step Angle	15	Degree
11	Absolute Accuracy 2 ph. On, Full step mode	+/- 5%	% Full Step
12	Steps Per Revolution	24	
13	Ambient Temperature Range (operating)	-20 to 50 (-4 to 122)	°C (°F)
14	Maximum Coil Temperature	130 (266)	°C (°F)
15	Thermal Resistance Coil-ambient (2)	45	°C/W
16	Natural Resonance Frequency (nominal current)	160	Hz
17	Electrical Time Constant	0.80	ms
18	Angular Acceleration (nominal current)	175,000	rad/s^2
19	Bearing Type	Ball	
20	Dielectric Withstanding Voltage	500 VRMS for 5 seconds	VAC
21	Radial Shaft Play	30@2N	µm
22	Axial Shaft Play	40@2N	µm
23	Maximum Radial Shaft Load	2.5 (9)	N (oz)
24	Maximum Axial Shaft Load (3)	2.5 (9)	N (oz)
25	Weight	23 (0.81)	g (oz)
26	Power Rate (nominal current)	1.2	kW/s

Notes:
1. Measured with 1 phase ON. The max coil temperature must be respected
2. Motor unmounted
3. Shaft must be supported when press-fitting a pulley or pinion

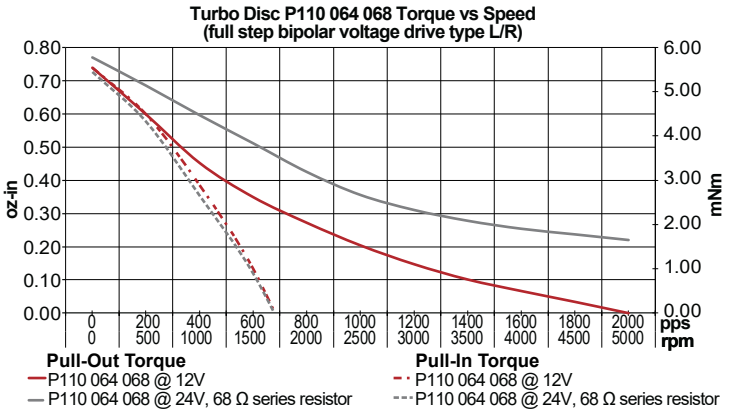

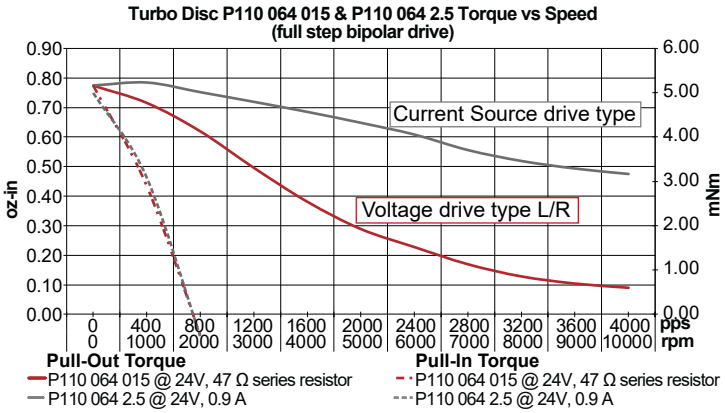

P310

Ø 32 mm • 14 mNm

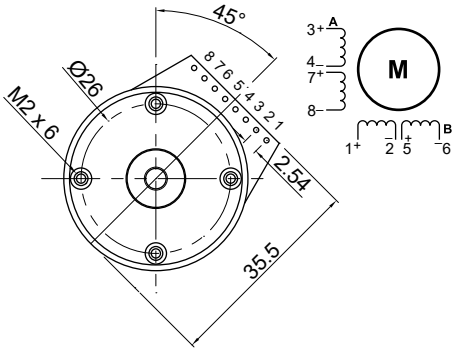

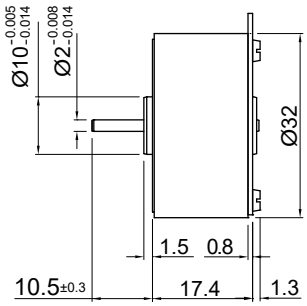

P310 158 . . . 09

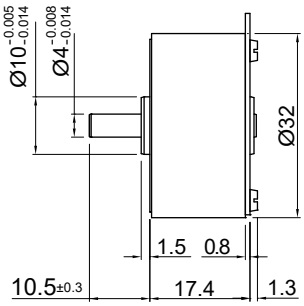

P310 158 . . . 10

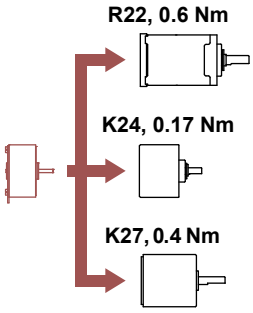

Dimensions in mm.

Electrical Data		P310 158 170		P310 158 005		Unit
		09/10 (series)	09/10 (parellel)	09/10 (series)	09/10 (parellel)	
1	Resistance per Phase, typ	332.0	83.0	10.5	2.6	Ohms
2	Inductance per Phase, typ	184.0	46.0	6.4	1.6	mH
3	Nominal Phase Current (2 ph. On)	0.06	0.12	0.36	0.72	A
4	Nominal Phase Current (1 ph. On)	0.09	0.17	0.51	1.00	A
5	Back EMF Amplitude	18.00	9.00	3.20	1.60	V/kstep/s

General Data			
6	Holding Torque, nominal current	14 (2)	mNm (oz-in)
7	Holding Torque, 1.5x nominal current (1)	20 (2.83)	mNm (oz-in)
8	Detent Torque	2.6 (0.37)	mNm (oz-in)
9	Rotor Inertia	0.860	$kgm^2 \times 10^{-7}$
10	Step Angle	6	Degree
11	Absolute Accuracy 2 ph. On, Full step mode	+/- 5%	% Full Step
12	Steps Per Revolution	60	
13	Ambient Temperature Range (operating)	-20 to 50 (-4 to 122)	°C (°F)
14	Maximum Coil Temperature	130 (266)	°C (°F)
15	Thermal Resistance Coil-ambient (2)	25	°C/W
16	Natural Resonance Frequency (nominal current)	230	Hz
17	Electrical Time Constant	0.60	ms
18	Angular Acceleration (nominal current)	140,000	rad/s^2
19	Bearing Type	Sleeve or Ball	
20	Dielectric Withstanding Voltage	500 VRMS for 5 seconds	VAC
21	Radial Shaft Play	35@5N / 15@1N	µm
22	Axial Shaft Play	100@5N / 10@1N	µm
23	Maximum Radial Shaft Load	1 / 10 (3.6 / 36)	N (oz)
24	Maximum Axial Shaft Load (3)	0.5 / 20 (1.8 / 72)	N (oz)
25	Weight	40 (1.4)	g (oz)
26	Power Rate (nominal current)	1.7	kW/s

Notes:
1. Measured with 1 phase ON. The max coil temperature must be respected
2. Motor unmounted
3. Shaft must be supported when press-fitting a pulley or pinion

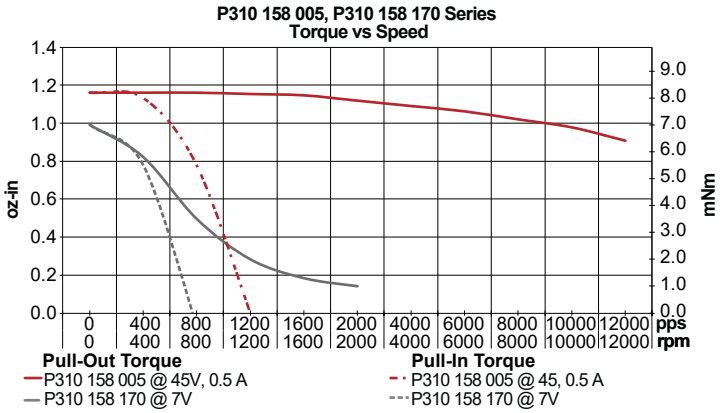

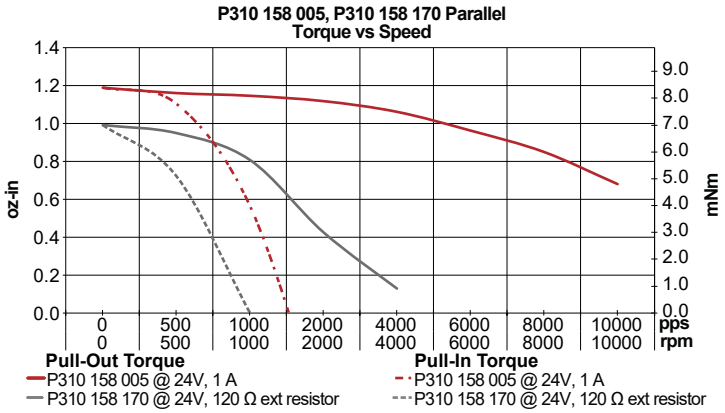

V092018 • © 2018 Portescap. Specifications subject to change without notice.

P430

Ø 39 mm • 60 mNm

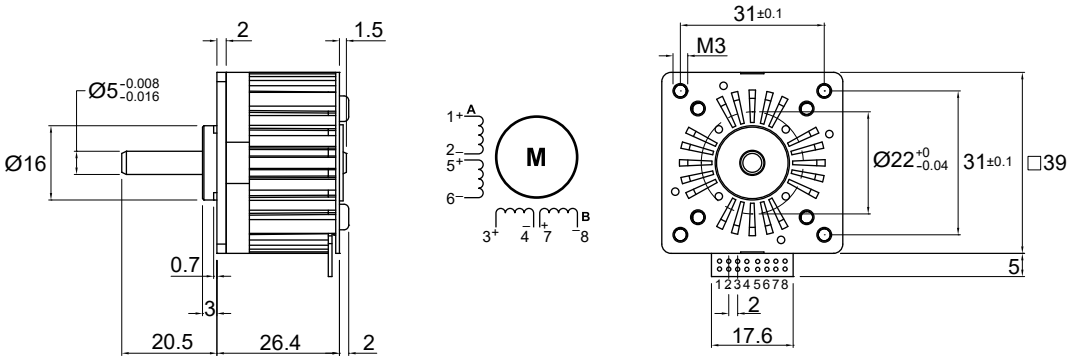

P430 258 . . . 01

Dimensions in mm.

Electrical Data		P430 258 013 01 (series)	P430 258 013 01 (parellel)	P430 258 005 01 (series)	P430 258 005 01 (parellel)	Unit
1	Resistance per Phase, typ	26.0	6.5	10.0	2.5	Ohms
2	Inductance per Phase, typ	40.0	10.0	14.0	3.5	mH
3	Nominal Phase Current (2 ph. On)	0.34	0.68	0.56	1.12	A
4	Nominal Phase Current (1 ph. On)	0.50	1.00	0.80	1.60	A
5	Back EMF Amplitude	7.50	3.80	4.70	2.30	V/kstep/s

General Data			
6	Holding Torque, nominal current	60 (8.5)	mNm (oz-in)
7	Holding Torque, 1.5x nominal current (1)	86 (12)	mNm (oz-in)
8	Detent Torque	6.5 (0.93)	mNm (oz-in)
9	Rotor Inertia	3.000	$kgm^2 \times 10^{-7}$
10	Step Angle	4	Degree
11	Absolute Accuracy 2 ph. On, Full step mode	+/- 5%	% Full Step
12	Steps Per Revolution	100	
13	Ambient Temperature Range (operating)	-20 to 50 (-4 to 122)	°C (°F)
14	Maximum Coil Temperature	130 (266)	°C (°F)
15	Thermal Resistance Coil-ambient (2)	11	°C/W
16	Natural Resonance Frequency (nominal current)	360	Hz
17	Electrical Time Constant	1.50	ms
18	Angular Acceleration (nominal current)	200,000	rad/s^2
19	Bearing Type	Ball	
20	Dielectric Withstanding Voltage	500 VRMS for 5 seconds	VAC
21	Radial Shaft Play	15@5N	µm
22	Axial Shaft Play	10@5N	µm
23	Maximum Radial Shaft Load	20 (72)	N (oz)
24	Maximum Axial Shaft Load (3)	30 (108)	N (oz)
25	Weight	100 (3.5)	g (oz)
26	Power Rate (nominal current)	12.0	kW/s

Notes:
1. Measured with 1 phase ON. The max coil temperature must be respected
2. Motor unmounted
3. Shaft must be supported when press-fitting a pulley or pinion

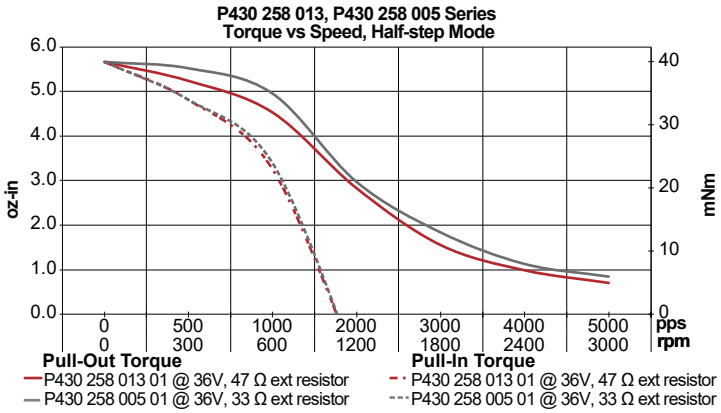

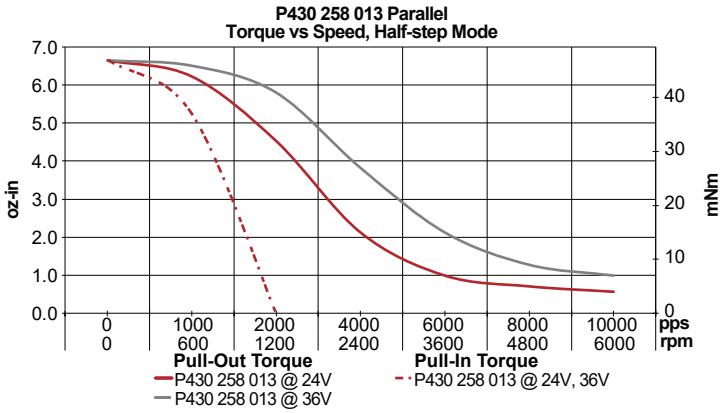

P520

Ø 52 mm •120 mNm

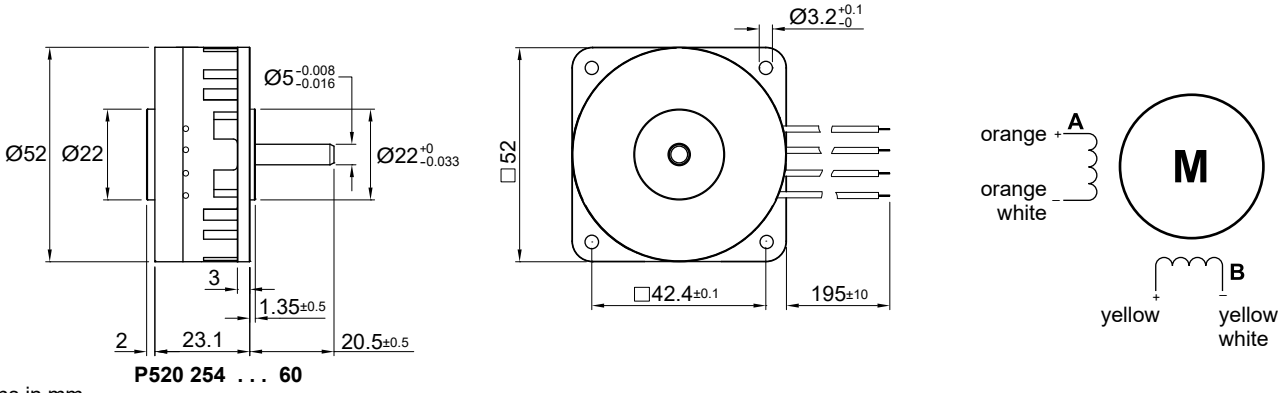

Dimensions in mm.

Electrical Data		P520 254 013 60	P520 254 004 60	P520 254 0.7 60	Unit
1	Resistance per Phase, typ	13.5	4.4	0.7	Ohms
2	Inductance per Phase, typ	27.0	8.0	1.3	mH
3	Nominal Phase Current (2 ph. On)	0.50	0.90	2.30	A
4	Nominal Phase Current (1 ph. On)	0.75	1.30	3.30	A
5	Back EMF Amplitude	9.80	5.50	2.10	V/kstep/s

General Data			
6	Holding Torque, nominal current	120 (17)	mNm (oz-in)
7	Holding Torque, 1.5x nominal current (1)	170 (24)	mNm (oz-in)
8	Detent Torque	18 (2.55)	mNm (oz-in)
9	Rotor Inertia	12.000	$kgm^2 \times 10^{-7}$
10	Step Angle	3.6	Degree
11	Absolute Accuracy 2 ph. On, Full step mode	+/- 5%	% Full Step
12	Steps Per Revolution	100	
13	Ambient Temperature Range (operating)	-20 to 50 (-4 to 122)	°C (°F)
14	Maximum Coil Temperature	130 (266)	°C (°F)
15	Thermal Resistance Coil-ambient (2)	9.5	°C/W
16	Natural Resonance Frequency (nominal current)	250	Hz
17	Electrical Time Constant	1.80	ms
18	Angular Acceleration (nominal current)	100,000	rad/s^2
19	Bearing Type	Ball	
20	Dielectric Withstanding Voltage	500 VRMS for 5 seconds	VAC
21	Radial Shaft Play	15@5N	µm
22	Axial Shaft Play	10@5N	µm
23	Maximum Radial Shaft Load	20 (72)	N (oz)
24	Maximum Axial Shaft Load (3)	30 (108)	N (oz)
25	Weight	180 (6.3)	g (oz)
26	Power Rate (nominal current)	12.0	kW/s

Notes:
1. Measured with 1 phase ON. The max coil temperature must be respected
2. Motor unmounted
3. Shaft must be supported when press-fitting a pulley or pinion

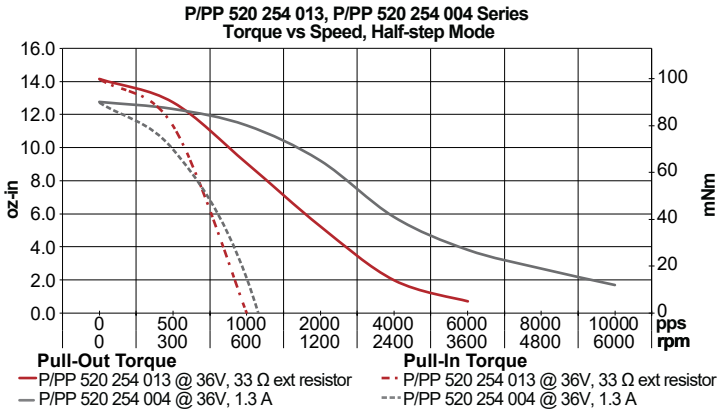

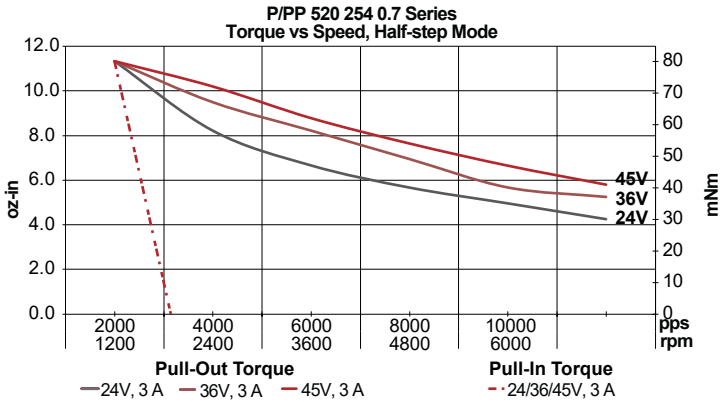

V092018 • © 2018 Portescap. Specifications subject to change without notice.

PP520

Ø 52 mm • 120 mNm

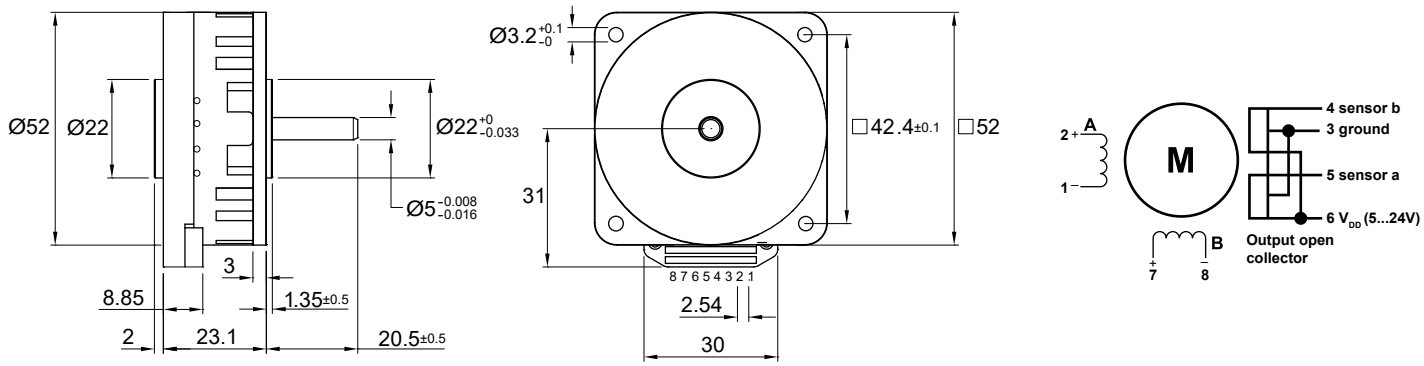

PP520 258 . . . 01

Dimensions in mm.

Electrical Data		PP520 258 013 01	PP520 258 004 01	PP520 258 0.7 01	Unit
1	Resistance per Phase, typ	13.5	4.4	0.7	Ohms
2	Inductance per Phase, typ	27.0	8.0	1.3	mH
3	Nominal Phase Current (2 ph. On)	0.50	0.90	2.30	A
4	Nominal Phase Current (1 ph. On)	0.75	1.30	3.30	A
5	Back EMF Amplitude	9.80	5.50	2.10	V/kstep/s

General Data			
6	Holding Torque, nominal current	120 (17)	mNm (oz-in)
7	Holding Torque, 1.5x nominal current (1)	170 (24)	mNm (oz-in)
8	Detent Torque	18 (2.55)	mNm (oz-in)
9	Rotor Inertia	12.000	$kgm^2 \times 10^{-7}$
10	Step Angle	3.6	Degree
11	Absolute Accuracy 2 ph. On, Full step mode	+/- 5%	% Full Step
12	Steps Per Revolution	100	
13	Ambient Temperature Range (operating)	-20 to 50 (-4 to 122)	°C (°F)
14	Maximum Coil Temperature	130 (266)	°C (°F)
15	Thermal Resistance Coil-ambient (2)	9.5	°C/W
16	Natural Resonance Frequency (nominal current)	250	Hz
17	Electrical Time Constant	1.80	ms
18	Angular Acceleration (nominal current)	100,000	rad/s^2
19	Bearing Type	Ball	
20	Dielectric Withstanding Voltage	500 VRMS for 5 seconds	VAC
21	Radial Shaft Play	15@5N	µm
22	Axial Shaft Play	10@5N	µm
23	Maximum Radial Shaft Load	20 (72)	N (oz)
24	Maximum Axial Shaft Load (3)	30 (108)	N (oz)
25	Weight	180 (6.3)	g (oz)
26	Power Rate (nominal current)	12.0	kW/s

Notes:
1. Measured with 1 phase ON. The max coil temperature must be respected
2. Motor unmounted
3. Shaft must be supported when press-fitting a pulley or pinion

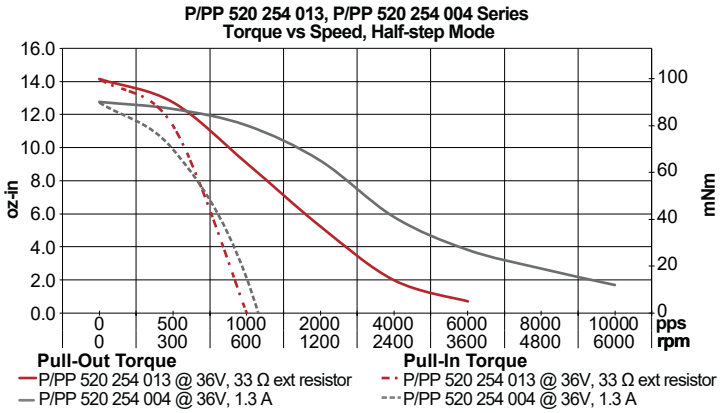

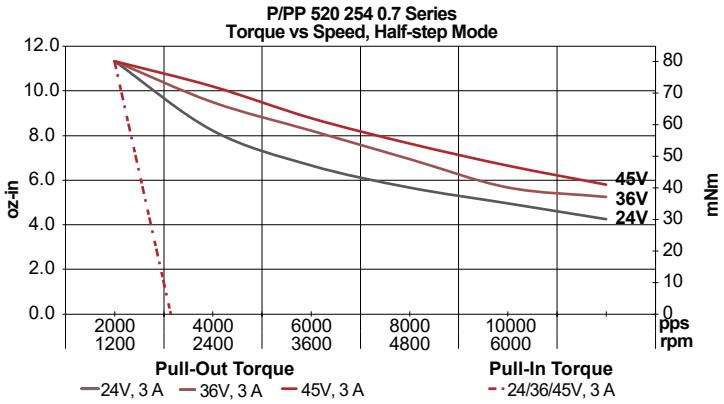

P532

Ø 52 mm • 205 mNm

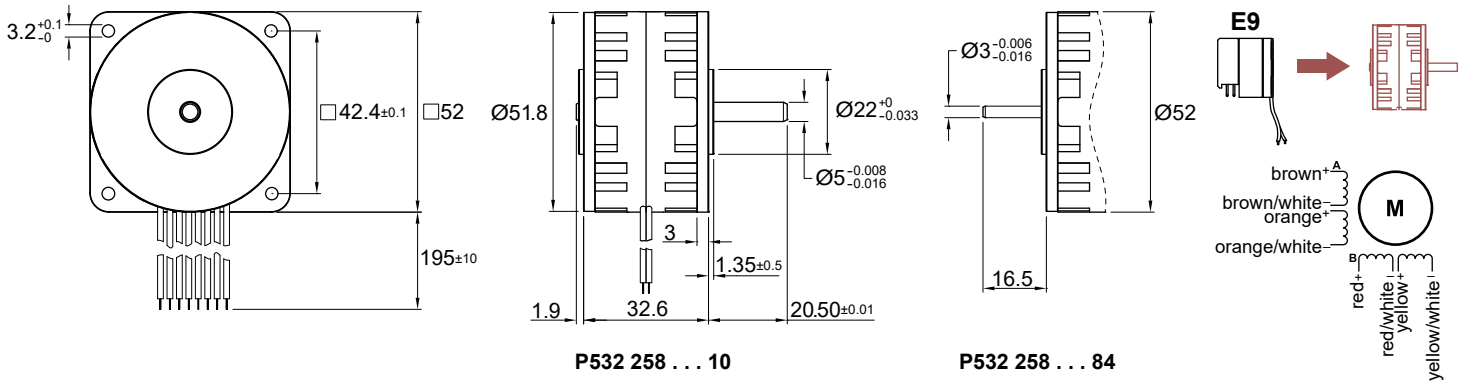

P532 258 . . . 10

P532 258 . . . 84

Dimensions in mm.

Electrical Data		P532 258 012 10/84 (series)	P532 258 004 10/84 (series)	P532 258 004 10/84 (parallel)	P532 258 0.7 10/84 (parallel)	Unit
1	Resistance per Phase, typ	27.0	8.8	2.2	0.35	Ohms
2	Inductance per Phase, typ	64.0	20.0	5.0	0.70	mH
3	Nominal Phase Current (2 ph. On)	0.40	0.70	1.40	3.70	A
4	Nominal Phase Current (1 ph. On)	0.56	1.00	2.00	5.20	A
5	Back EMF Amplitude	21.00	12.00	6.00	2.30	V/kstep/s

General Data			
6	Holding Torque, nominal current	205 (29)	mNm (oz-in)
7	Holding Torque, 1.5x nominal current (1)	300 (42.5)	mNm (oz-in)
8	Detent Torque	40 (5.67)	mNm (oz-in)
9	Rotor Inertia	12.000	$kgm^2 \times 10^{-7}$
10	Step Angle	3.6	Degree
11	Absolute Accuracy 2 ph. On, Full step mode	+/- 5%	% Full Step
12	Steps Per Revolution	100	
13	Ambient Temperature Range (operating)	-20 to 50 (-4 to 122)	°C (°F)
14	Maximum Coil Temperature	130 (266)	°C (°F)
15	Thermal Resistance Coil-ambient (2)	7.3	°C/W
16	Natural Resonance Frequency (nominal current)	330	Hz
17	Electrical Time Constant	2.30	ms
18	Angular Acceleration (nominal current)	195,000	rad/s^2
19	Bearing Type	Ball	
20	Dielectric Withstanding Voltage	500 VRMS for 5 seconds	VAC
21	Radial Shaft Play	25@5N	µm
22	Axial Shaft Play	25@5N	µm
23	Maximum Radial Shaft Load	20 (72)	N (oz)
24	Maximum Axial Shaft Load (3)	30 (108)	N (oz)
25	Weight	250 (8.8)	g (oz)
26	Power Rate (nominal current)	35.0	kW/s

Notes:
1. Measured with 1 phase ON. The max coil temperature must be respected
2. Motor unmounted
3. Shaft must be supported when press-fitting a pulley or pinion

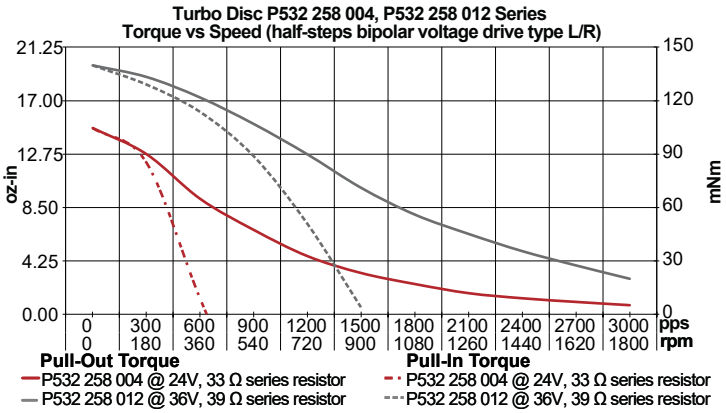

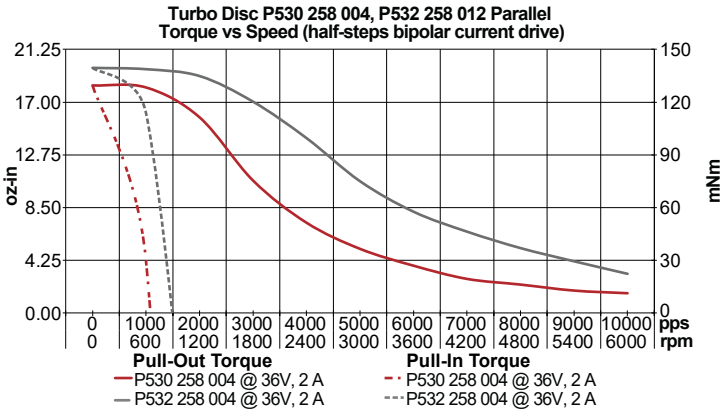

V092018 • © 2018 Portescap. Specifications subject to change without notice.

P532 with Encoder

Ø 52 mm • 205 mNm

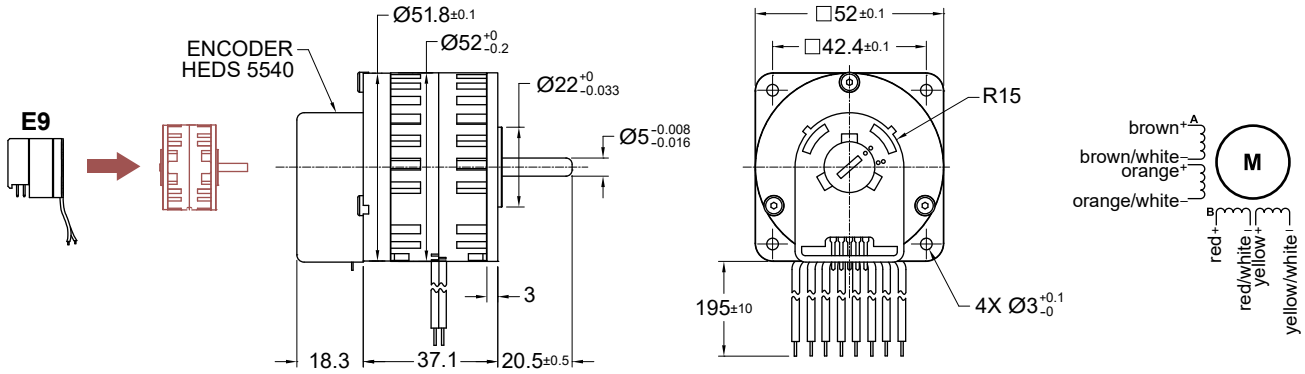

Dimensions in mm.

Electrical Data		P532 012 150 HEDS 5540 A11 (series)	P532 004 150 HEDS 5540 A11 (series)	P532 004 150 HEDS 5540 A11 (parallel)	P532 0.7 150 HEDS 5540 A11 (parallel)	Unit
1	Resistance per Phase, typ	27.0	8.80	2.20	0.31	Ohms
2	Inductance per Phase, typ	64.0	20.0	5.0	0.70	mH
3	Nominal Phase Current (2 ph. On)	0.40	0.70	1.40	3.74	A
4	Nominal Phase Current (1 ph. On)	0.56	1.00	2.00	5.29	A
5	Back EMF Amplitude	21.00	12.00	6.00	2.30	V/kstep/s

General Data			
6	Holding Torque, nominal current	205 (29)	mNm (oz-in)
7	Holding Torque, 1.5x nominal current (1)	300 (42.5)	mNm (oz-in)
8	Detent Torque	45 (6.4)	mNm (oz-in)
9	Rotor Inertia	13.0	$kgm^2 \times 10^{-7}$
10	Step Angle	3.6	Degree
11	Absolute Accuracy 2 ph. On, Full step mode	+/- 5%	% Full Step
12	Steps Per Revolution	100	
13	Ambient Temperature Range (operating)	-20 to 50 (-4 to 122)	°C (°F)
14	Maximum Coil Temperature	130 (266)	°C (°F)
15	Thermal Resistance Coil-ambient (2)	7.3	°C/W
16	Natural Resonance Frequency (nominal current)	350	Hz
17	Electrical Time Constant	2.30	ms
18	Angular Acceleration (nominal current)	171,000	rad/s^2
19	Bearing Type	Ball	
20	Dielectric Withstanding Voltage	500 VRMS for 5 seconds	VAC
21	Radial Shaft Play	25@5N	µm
22	Axial Shaft Play	25@5N	µm
23	Maximum Radial Shaft Load	20 (72)	N (oz)
24	Maximum Axial Shaft Load (3)	30 (108)	N (oz)
25	Weight	260 (9.2)	g (oz)
26	Power Rate (nominal current)	35.0	kW/s

Notes:
1. Measured with 1 phase ON. The max coil temperature must be respected
2. Motor unmounted
3. Shaft must be supported when press-fitting a pulley or pinion
4. For encoder specification, please refer to the dedicated encoder catalog page for HEDS 5540

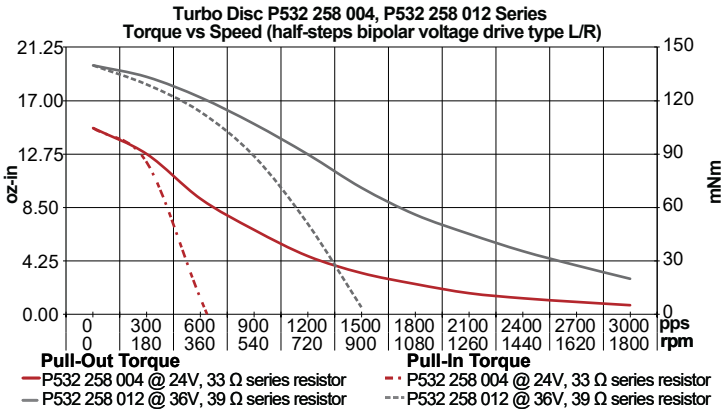

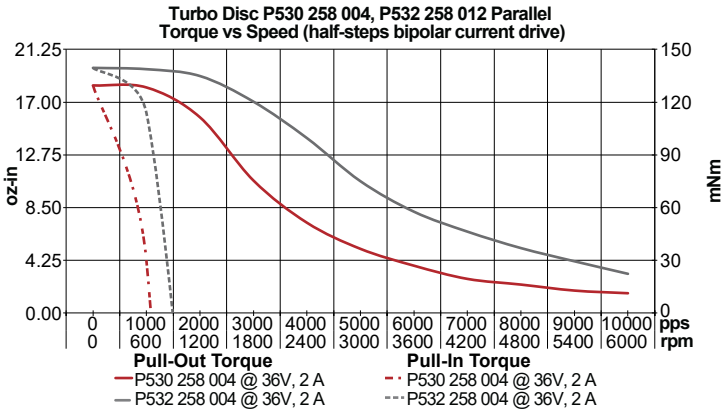

P760 with Encoder

Ø 74 mm • 325 mNm

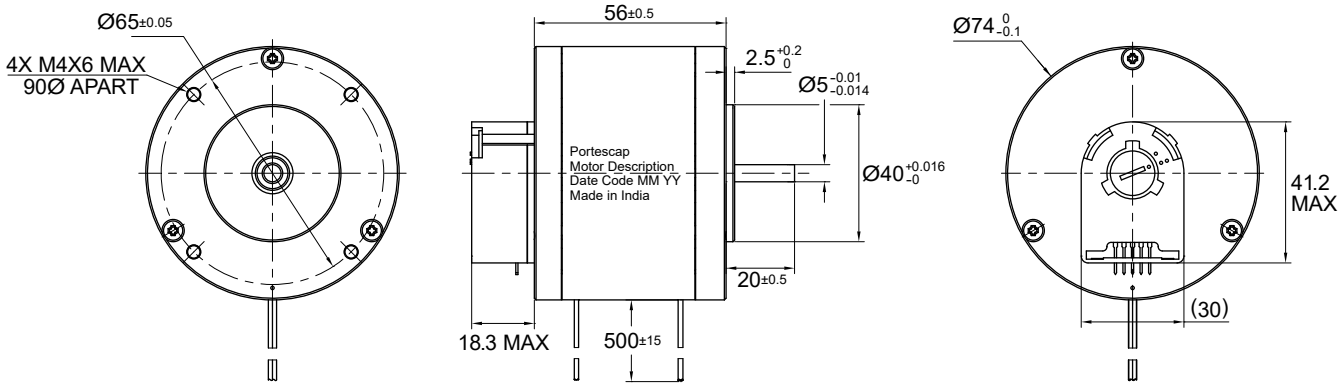

Dimensions in mm.

Electrical Data		P760 0.4 05 HEDS 5540 A11	Unit
1	Resistance per Phase, typ	0.4	Ohms
2	Inductance per Phase, typ	2.1	mH
3	Nominal Phase Current (2 ph. On)	4.30	A
4	Nominal Phase Current (1 ph. On)	6.00	A
5	Back EMF Amplitude	7.10	V/kstep/s
General Data			
6	Holding Torque, nominal current	325 (46)	mNm (oz-in)
7	Holding Torque, 1.5x nominal current (1)	485 (68.7)	mNm (oz-in)
8	Detent Torque	20 (2.8)	mNm (oz-in)
9	Rotor Inertia	17	$kgm^2 \times 10^{-7}$
10	Step Angle	7.5	Degree
11	Absolute Accuracy 2 ph. On, Full step mode	+/- 5%	% Full Step
12	Steps Per Revolution	48	
13	Ambient Temperature Range (operating)	-20 to 50 (-4 to 122)	°C (°F)
14	Maximum Coil Temperature	130 (266)	°C (°F)
15	Thermal Resistance Coil-ambient (2)	5	°C/W
16	Natural Resonance Frequency (nominal current)	240	Hz
17	Electrical Time Constant	4.70	ms
18	Angular Acceleration (nominal current)	190,000	rad/s^2
19	Bearing Type	Ball	
20	Dielectric Withstanding Voltage	500 VRMS for 5 seconds	VAC
21	Radial Shaft Play	25@5N	µm
22	Axial Shaft Play	25@5N	µm
23	Maximum Radial Shaft Load	20 (72)	N (oz)
24	Maximum Axial Shaft Load (3)	30 (108)	N (oz)
25	Weight	700 (25)	g (oz)
26	Power Rate (nominal current)	58.0	kW/s

Notes:
1. Measured with 1 phase ON. The max coil temperature must be respected
2. Motor unmounted
3. Shaft must be supported when press-fitting a pulley or pinion

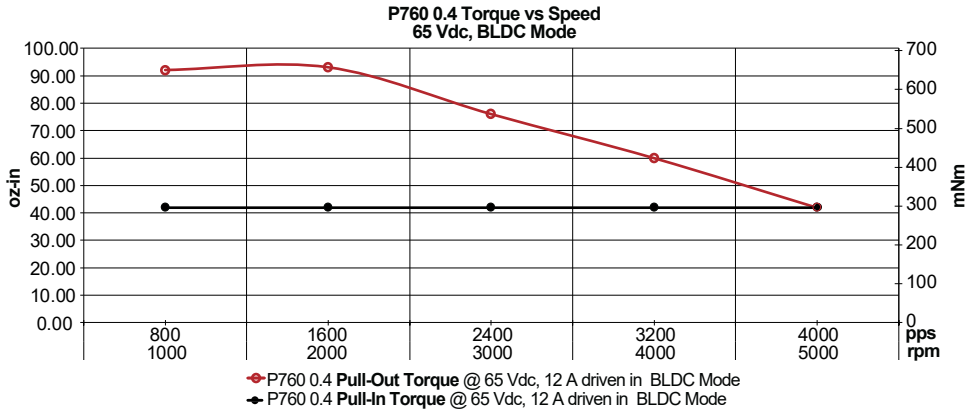

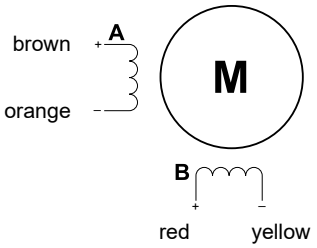

V092018 • © 2018 Portescap. Specifications subject to change without notice.