ROSIER
Mécatronique

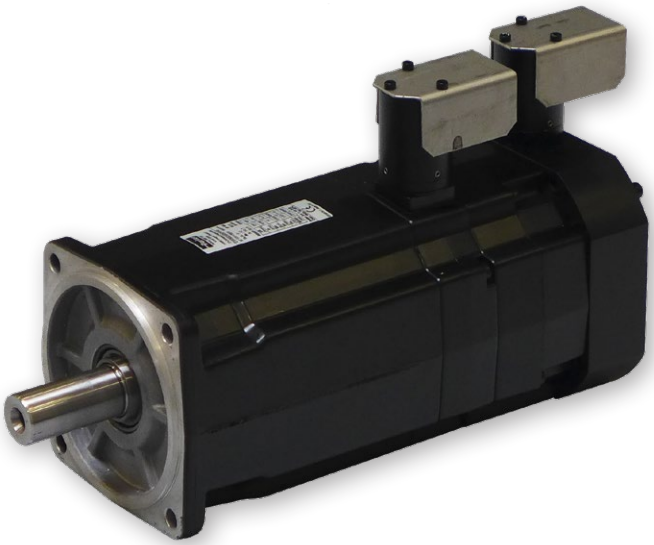

EXPLOSION PROOF SERVO MOTORS

WARNING — USER RESPONSIBILITY

FAILURE OR IMPROPER SELECTION OR IMPROPER USE OF THE PRODUCTS DESCRIBED HEREIN OR RELATED ITEMS CAN CAUSE DEATH, PERSONAL INJURY AND PROPERTY DAMAGE.

- This document and other information from Parker-Hannifin Corporation, its subsidiaries and authorized distributors provide product or system options for further investigation by users having technical expertise.
- The user, through its own analysis and testing, is solely responsible for making the final selection of the system and components and assuring that all performance, endurance, maintenance, safety and warning requirements of the application are met. The user must analyze all aspects of the application, follow applicable industry standards, and follow the information concerning the product in the current product catalog and in any other materials provided from Parker or its subsidiaries or authorized distributors.
- To the extent that Parker or its subsidiaries or authorized distributors provide component or system options based upon data or specifications provided by the user, the user is responsible for determining that such data and specifications are suitable and sufficient for all applications and reasonably foreseeable uses of the components or systems.

SALE CONDITIONS

The items described in this document are available for sale by Parker Hannifin Corporation, its subsidiaries or its authorized distributors. Any sale contract entered into by Parker will be governed by the provisions stated in Parker's standard terms and conditions of sale (copy available upon request).

Table of Contents

Standard

Hazardous Areas Classification 5
Compliance with China Standards 6
Operating category and marking of EY servomotors 7
Operating category and marking of EX servomotors 8

Explosion Proof Motor for Zone 2 - EY Series

Overview 10
EY Servo Motors - CE Marked for Explosive Atmospheres 11
Drive Associations 13
Dimensions 15
Order Code 16

Explosion Proof Motor for Zone 1 - EX Series

Overview 18
EX Servo Motors - CE Marked for Explosive Atmospheres 19
Drive Associations 21
Dimensions (Resolver Version) 23
Order Code 25
Additional Information 27
- Feedback Sensors 27
- Shaft Loads for CE Motors 27

ATEX Gearboxes GXA Series

Overview 28
Technical Characteristics 29
Dimensions 32
Gearbox Combinations 34
Order Code 35

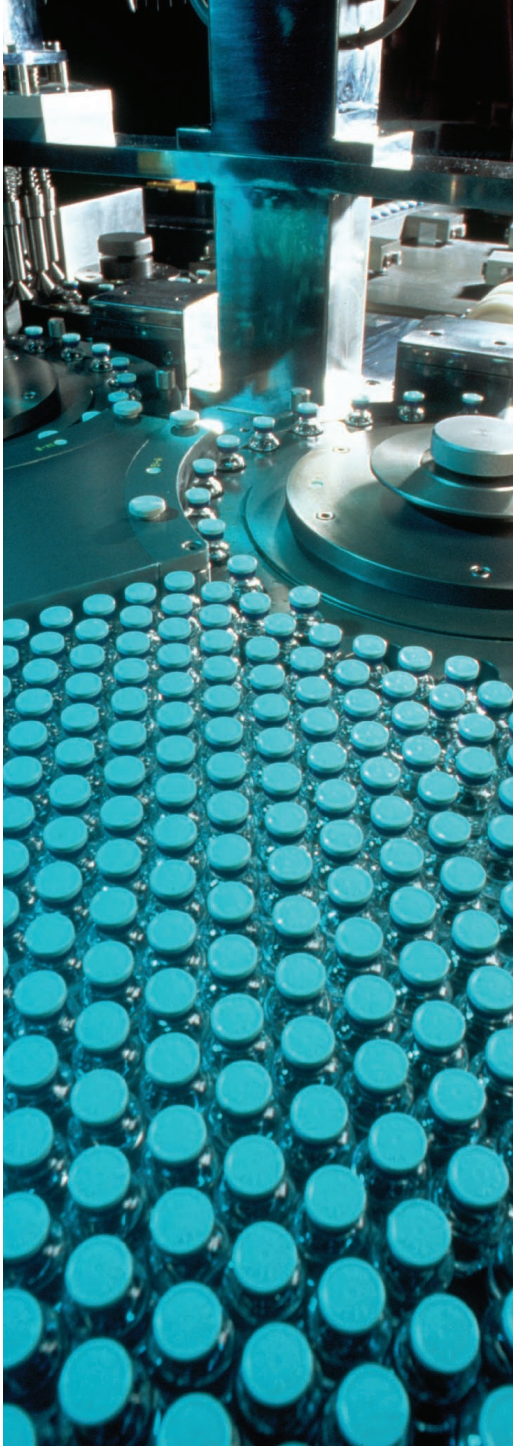

If you have questions about the products contained in this catalog, or their applications, please contact:
Parker Hannifin EMEA Sàrl European Headquarters
parker.com/msge

Series	EY		EX	
	www.parker.com/eme/ey		www.parker.com/eme/ex	
	page 10		page 18	
Marking	ATEX	CCC	ATEX/IECEx, KOSHA	CCC
EX Zone	Zone 2 / 22	Zone 2 / 22	Zone 1 / 21	Zone 1 / 21
Classification	Gas or Dust	Gas or Dust	Gas or Dust	Gas or Dust
Torque	1.8 to 41 Nm	1.8 to 41 Nm	1.75 to 35 Nm	1.75 to 35 Nm
Max Speed	6 800 min^{-1}	6 800 min^{-1}	6 800 min^{-1}	6 800 min^{-1}
Ingress protection level	IP65	IP65	IP65	IP65
Power Supply	230 - 400 VAC	230 - 400 VAC	230 - 400 VAC	230 - 400 VAC
Conformance	ATEX 2014/34/EU Directive	CNCA-C23-01 2019 CNEX-C2301-2019	ATEX 2014/34/EU Directive	CNCA-C23-01 2019 CNEX-C2301-2019

STANDARDS

Hazardous Areas Classification

Dangerous Areas Identification

European directive 99/92/EC makes explicit the responsibility of employers to protect employees who may be exposed to risk of ATEX environments (Explosive Atmosphere). The employer must assess the risk and classify potentially dangerous areas. Equipment and materials must also be suited for use in dangerous areas in accordance with ATEX directive 2014/34/EU.

Suitable for ATEX/IECEX Parker servomotors

		EX Series	
			EY Series
Hazard	Permanent	Occasional	Unusal
Definition	Explosive atmospheres present continuously, for long periods or frequently	Explosive atmospheres are likely to occur	Explosive atmospheres are unlikely to occur or present only infrequently and for a short period only
Gas and vapour	Zone 0	Zone 1	Zone 2
Dust	Zone 20	Zone 21	Zone 22
Category	1 Very high level of protection	2 High level of protection	3 Normal level of protection

Classification of common combustible gases and vapours according to temperature class and explosion group

		EX Series					
		EY Series					
T° Class		T1	T2	T3	T4	T5	T6
Group	I	Methane					
	II A	Acetic acid Acetone Ammonia Benzene Carbon monoxide Ethane Ethyl... Methane Methanol Methyl... Naphtalene Propane Toluene Xylene	Butyl acetate Amylic alcohol Liquefied gas Natural gas Butane Ethyl alcohol	Cyclohexane Cyclohexanol Diesel fuels Gasoline Heptane Hexane Pentane Petroleum (depending on composition)	Acetaldehyde Ether		
	II B	Coke gas	Butadiene Ethylene Ethylbenzene Ethylene oxide	Hydrogen sulphide Isoprene Petroleum (depending on composition)	Ethyl ether		
	II C	Hydrogen	Acetylene				Carbon disulphide Ethyl nitrate

Compliance with China Standards

	for EX motors	For EY motors
Marking	CCC	CCC
Conformance	CNCA-C23-01 2019 CNEX-C2301-2019	CNCA-C23-01 2024 CNEX-C2301-2023
Standards	GB/T3836.1-2021 GB/T3836.2-2021 GB/T3836.31-2021	GB/T3836.1-2021 GB/T3836.2-2021 GB/T3836.31-2021
Marking	Ex d IIB T4 Gb, Ex tb IIIC T135°C Db (Gas or Dust)	Ex ec IIC T3 Gc, Ex ec IIIC T200°C Dc (Gas or Dust)
Ingress protection level	IP65 (Gas or dust)	Ex ec IIC T3 Gc, Ex tc IIIC T200°C Dc (Gas or Dust)

For EY motors
CCC: "CCC" motors have exactly the same construction as IECEx motors (with the exception of a specific nameplate). They are intended for use in the same areas (gas or dust) and have the same degree of safety. Refer to standards GB/T3836.1-2021, GB/T3836.2-2021, GB/T3836.31-2021 for more details.

For EY motors
CCC: "CCC" motors have exactly the same construction as ATEX motors (with the exception of a specific nameplate). They are intended for use in the same areas (gas or dust) and have the same degree of safety. Refer to standards GB/T3836.1-2021, GB/T3836.2-2021, GB/T3836.31-2021 for more details.

Operating category and marking of EY servomotors

ATEX gazeous atmospheres

II 3 G Ex ec IIC T3 Gc IP65

I I	3	G	Ex	nA	II	C	T3*	Gc	IP65
I Mine	M1 Very high level of protection	G Gas Vapour	Protection against explosions	nC Equipment with protection against sparks	I Mine	Methane	T1 450 °C	Ma Very high level of protection	IP65
	M2 High level of protection			nR Equipment with restricted breathing			T2 300 °C	Mb High level of protection	
II Surface	1 Very high level of protection			ec Equipment not generating sparks	II Surface	A Propane	T3 200 °C	Ga Very high level of protection	
	2 High level of protection					B Ethylene	T4 135 °C	Gb High level of protection	
	3 Normal level of protection					C Hydrogen Acetylene	T5 100 °C	Gc Normal level of protection	
							T6 85 °C		

* Maximum surface temperature

ATEX dusty atmospheres

II 3 GD Ex ec IIC T3 Gc IP65 / Ex tc IIIC T200°C Dc IP65

I I	3	D	Ex	tc	III	C	T3*	Dc	IP65
I Mine	M1 Very high level of protection	D Dust	Protection against explosions	ta Protection by enclosure	III Dust	A Combustible flying	T1 450 °C	Ma Very high level of protection	IP65
	M2 High level of protection			tb/tc Protection by enclosure			T2 300 °C	Mb High level of protection	
II Surface	1 Very high level of protection			pb/pc pressurized enclosure		B Non-conductive dust	T3 200 °C	Da Very high level of protection	
	2 High level of protection			ia/ib/ic intrinsic safety			T4 135 °C	Db High level of protection	
	3 Normal level of protection			ma/mb/mc Encapsulation		C Conductive dust	T5 100 °C	Dc Normal level of protection	
							T6 85 °C		

Suitable for ATEX Parker EY servomotors

Operating category and marking of EX servomotors

ATEX/IECEx gazeous atmospheres

II2 G Ex db IIB T4 Gb IP65 – Group IIA or IIB – category 2G – zone 1 and 2.

I I	2	G	Ex	db	II	B	T4*	Gb	IP65
I Mine	M1 Very high level of protection	G Gas Vapour	Protection against explosions	o Oil immersion	I Mine	Methane	T1 450 °C	Ma Very high level of protection	IP65
	M2 High level of protection			p Pressurized apparatus			T2 300 °C	Mb High level of protection	
II Surface	1 Very high level of protection			db Flameproof enclosure	II Surface	A Propane	T3 200 °C	Ga Very high level of protection	
	2 High level of protection			e Increased safety		B Ethylene	T4 135 °C	Gb High level of protection	
	3 Normal level of protection			m Encapsulation		C Hydrogen Acetylene	T5 100 °C	Gc Normal level of protection	
				i Intrinsic safety			T6 85 °C		

* Maximum surface temperature

ATEX/IECEx dusty atmospheres

II2 D Ex tb IIIC T135 °C Db IP65 - category 2D – zone 21 and 22

I I	2	D	Ex	tb	III	C	T135°C*	Db	IP65
I Mine	M1 Very high level of protection	D Dust	Protection against explosions	ta Protection by enclosure	III Dust	A Combustible flying	T1 450 °C	Ma Very high level of protection	IP65
	M2 High level of protection			tb/tc Protection by enclosure			T2 300 °C	Mb High level of protection	
II Surface	1 Very high level of protection			pb/pc pressurized enclosure		B Non-conductive dust	T3 200 °C	Da Very high level of protection	
	2 High level of protection			ia/ib/ic intrinsic safety			T4 135 °C	Db High level of protection	
	3 Normal level of protection			ma/mb/mc Encapsulation		C Conductive dust	T5 100 °C	Dc Normal level of protection	
							T6 85 °C		

Suitable for ATEX/IECEX Parker EX servomotors

EXPLOSION PROOF MOTOR FOR ZONE 2 - EY SERIES

Overview

Description

The EY series is a range of permanent magnet explosion-proof brushless servo motors designed for use in **explosive atmospheres** in zone 2 for gas and dust at 40°C or 60°C ambient temperature. The EY series of servo motors are characterized by excellent motion quality, dynamic acceleration/deceleration capabilities and high torque output over a wide speed range. Various winding variants and numerous options are available to offer maximum flexibility. This range is in accordance with the European (CE) and International safety standards.

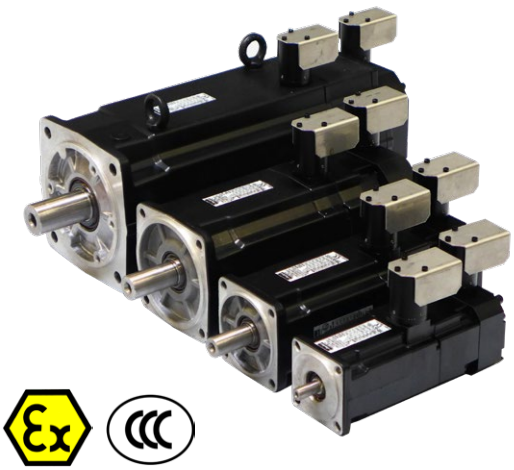

Advantages

- Brushless servo motors with explosion proof certification from a notified body.
- Conforming with CE/ATEX or CCC
- For an ambiant temperature at 40°c or 60°C
- For gas and dust explosive atmospheres
- High precision
- High motion quality
- High dynamic performance
- Low cogging
- Compactness and robustness
- Maintenance free
- High power density (6 kW in a 155 square frame)
- Compatible with all popular drives

Applications

- Printing machinery
- Paint spray equipments
- Chemical, petro-chemical and pharmaceutical industries
- Robot applications
- Special machines
- Cleaning applications
- Actuator for valve in Energy applications
- Waste processing plants

Technical characteristics

Motor type	Permanent magnet synchronous motors
Frame size	70 - 155 mm
Torque range	1.8 to 41 Nm
Speed range	Up to 6800 min^{-1}
Number of poles	10
Mounting	Flange with smooth holes
Marking*	CE / ATEX or CCC
Voltage supply	230 / 400 VAC
Conformance*	ATEX 2014/34/EU Directive IEC/EN60034-1 IEC/EN60034-5 IEC/EN60079-0 IEC/EN60079-7 (Gas) IEC/EN60079-31 (Dust)
Classification	II 3 GD Ex ec IIC T3 Gc IP65 / Ex tc IIIC T200°C Dc IP65 (Gas or dust)
Ingress protection level	IP65
Connections	Connector

* For CCC please see page 6"

EY Servo Motors - CE Marked for Explosive Atmospheres

Technical Data

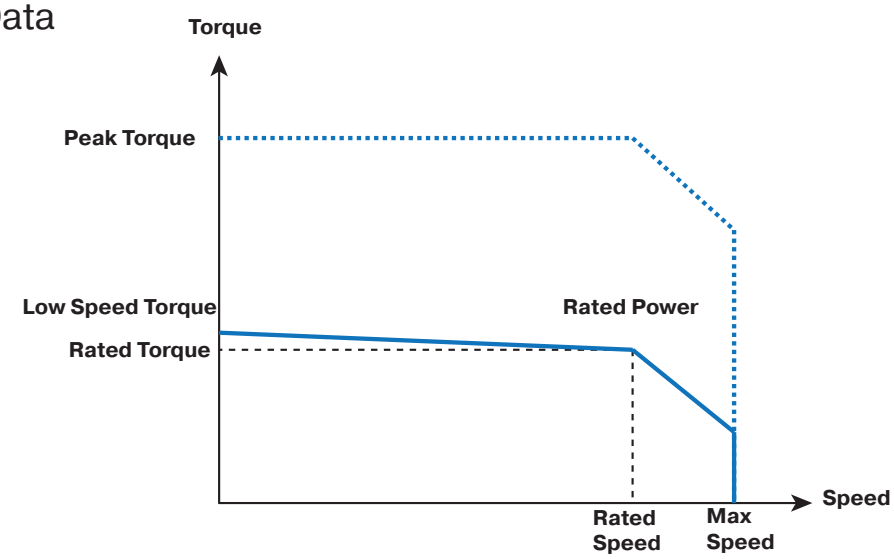

230 VAC power supply - single or three-phased

Motor	Rated Power Pn	Rated Torque Mn	Rated Speed Nn	Rated Current In	Low speed torque Mo	Low Speed Current Io	Peak Torque M peak	Peak Current I peak	Max. Speed N max
	[kW]	[Nm]	[rpm]	[Arms]	[Nm]	[Arms]	[Nm]	[Arms]	[rpm]
40°C ambient temperature									
EY310EAP	0.456	1.89	2300	1.37	2	1.43	4.72	3.58	2300
EY310EAK	0.718	1.71	4000	2.2	2	2.5	4.72	6.25	4000
EY420EAP	0.911	3.78	2300	2.69	4	2.81	9.47	7.03	2300
EY420EAJ	1.42	3.38	4000	4.21	4	4.87	9.47	12.2	4000
EY430EAL	1.2	4.99	2300	3.45	5.5	3.76	13.1	9.4	2300
EY430EAF	1.72	4.1	4000	5.05	5.5	6.6	13.1	16.5	4000
EY620EAV	0.905	7.85	1100	2.78	8	2.82	18.9	7.04	1100
EY620EAR	1.71	7.42	2200	4.95	8	5.29	18.9	13.2	2200
EY630EAR	1.72	11.3	1450	5.19	12	5.47	28.4	13.7	1450
EY630EAN	2.53	10.5	2300	7.29	12	8.26	28.4	20.6	2300
EY820EAR	3.34	14.5	2200	9.74	16	10.7	36.8	26.7	2200
EY840EAK	4.91	23.5	2000	13.7	28	16.2	65.8	40.4	2000
EY860EAJ	5.23	34.4	1450	14.9	41	17.7	96.7	44.2	1450
60°C ambient temperature									
EY310EAP	0.4	1.66	2300	1.2	1.8	1.29	4.3	3.21	2300
EY310EAK	0.61	1.46	4000	1.88	1.8	2.25	4.3	5.62	4000
EY420EAP	0.752	3.12	2300	2.22	3.4	2.39	8.17	5.97	2300
EY420EAJ	1.13	2.7	4000	3.38	3.4	4.13	8.17	10.3	4000
EY430EAL	1.06	4.41	2300	3.05	5.0	3.41	12	8.54	2300
EY430EAF	1.41	3.36	4000	4.16	5.0	5.99	12	15	4000
EY620EAV	0.8	6.95	1100	2.46	7.2	2.53	17.3	6.33	1100
EY620EAR	1.47	6.38	2200	4.25	7.2	4.75	17.3	11.9	2200
EY630EAR	1.53	10.1	1450	4.61	10.8	4.92	25.9	12.3	1450
EY630EAN	2.18	9.05	2300	6.3	10.8	7.43	25.9	18.6	2300
EY820EAR	2.69	11.7	2200	7.85	14.0	9.32	32.9	23.3	2200
EY840EAK	3.86	18.4	2000	10.8	25.5	14.7	60.8	36.8	2000
EY860EAJ	4.4	29	1450	12.6	37.0	15.9	88.5	39.8	1450

400 VAC power supply - three-phased

Motor	Rated Power Pn	Rated Torque Mn	Rated Speed Nn	Rated Current In	Low speed torque Mo	Low Speed Current Io	Peak Torque M peak	Peak Current I peak	Max. Speed N max
	[kW]	[Nm]	[rpm]	[Arms]	[Nm]	[Arms]	[Nm]	[Arms]	[rpm]
40°C ambient temperature									
EY310EAP	0.718	1.71	4000	1.26	2	1.43	4.72	3.58	4000
EY310EAK	0.873	1.39	6000	1.82	2	2.5	4.72	6.25	6000
EY420EAP	1.42	3.38	4000	2.43	4	2.81	9.47	7.03	4000
EY420EAJ	1.59	3.04	5000	3.83	4	4.87	9.47	12.2	5000
EY430EAL	1.72	4.1	4000	2.87	5.5	3.76	13.1	9.4	4000
EY430EAF	1.77	3.37	5000	4.21	5.5	6.6	13.1	16.5	5000
EY620EAV	1.57	7.52	2000	2.67	8	2.82	18.9	7.04	2000
EY620EAR	2.52	6.17	3900	4.16	8	5.29	18.9	13.2	3900
EY630EAR	2.83	10.0	2700	4.61	12	5.47	28.4	13.7	2700
EY630EAN	3.31	7.9	4000	5.57	12	8.26	28.4	20.6	4000
EY820EAR	5.29	12.9	3900	8.78	16	10.7	36.8	26.7	3900
EY840EAK	6.8	18.6	3500	11.0	28	16.2	65.8	40.4	3500
EY860EAJ	6.27	23.0	2600	10.2	41	17.7	96.7	44.2	2600
60°C ambient temperature									
EY310EAP	0.61	1.46	4000	1.07	1.8	1.29	4.3	3.21	4000
EY310EAK	0.697	1.11	6000	1.48	1.8	2.25	4.3	5.62	6000
EY420EAP	1.13	2.7	4000	1.95	3.4	2.39	8.17	5.97	4000
EY420EAJ	1.24	2.36	5000	3	3.4	4.13	8.17	10.3	5000
EY430EAL	1.41	3.36	4000	2.37	5.0	3.41	12	8.54	4000
EY430EAF	1.33	2.59	4900	3.28	5.0	5.99	12	15	4900
EY620EAV	1.36	6.5	2000	2.31	7.2	2.53	17.3	6.33	2000
EY620EAR	1.98	4.85	3900	3.29	7.2	4.75	17.3	11.9	3900
EY630EAR	2.38	8.43	2700	3.9	10.8	4.92	25.9	12.3	2700
EY630EAN	2.42	5.78	4000	4.12	10.8	7.43	25.9	18.6	4000
EY820EAR	3.17	7.76	3900	5.35	14.0	9.32	32.9	23.3	3900
EY840EAK	3.85	14.1	2600	8.38	25.5	14.7	60.8	36.8	2600
EY860EAJ	4.8	21.8	2100	9.61	37.0	15.9	88.5	39.8	2100

Drive Associations

230 VAC power supply

Motor	Associated Drive Sizes[1]	
	PSD1[2]	Compax3
With 40°C ambiant temperature - 230 VAC power supply		
EY310EAP	PSD1SW1200...	C3S025V2...
EY310EAK	PSD1SW1300...	C3S025V2...
EY420EAP	PSD1SW1300...	C3S063V2...
EY420EAJ	PSD1SW1300...	C3S063V2...
EY430EAL	PSD1SW1300...	C3S063V2...
EY430EAF	-	C3S100V2...
EY620EAV	PSD1SW1300...	C3S063V2...
EY620EAR	-	C3S063V2...
EY630EAR	-	C3S063V2...
EY630EAN	-	C3S100V2...
EY820EAR	-	C3S150V2...
EY840EAK	-	-
EY860EAJ	-	-
With 60°C ambiant temperature - 230 VAC power supply		
EY310EAP	PSD1SW1200...	C3S025V2...
EY310EAK	PSD1SW1300...	C3S025V2...
EY420EAP	PSD1SW1300...	C3S063V2...
EY420EAJ	PSD1SW1300...	C3S063V2...
EY430EAL	PSD1SW1300...	C3S063V2...
EY430EAF	-	C3S063V2...
EY620EAV	PSD1SW1300...	C3S025V2...
EY620EAR	-	C3S063V2...
EY630EAR	-	C3S063V2...
EY630EAN	-	C3S100V2...
EY820EAR	-	C3S100V2...
EY840EAK	-	C3S150V2...
EY860EAJ	-	-

[1] Ambient temperature for the drives is 40°C
[2] PSD drive with optional resolver board only

400 VAC power supply

Motor	Associated Drive Sizes[1]		
	PSD1[2]	Compax3	AC30V
With 40°C ambiant temperature - 400 VAC power supply			
EY310EAP	PSD1MW1300...	C3S015V4...	31V-4D-0004
EY310EAK	PSD1MW1300...	C3S038V4...	31V-4D-0004
EY420EAP	PSD1MW1300...	C3S038V4...	31V-4D-0004
EY420EAJ	PSD1MW1300...	C3S075V4...	31V-4D-0008
EY430EAL	PSD1MW1300...	C3S038V4...	31V-4D-0005
EY430EAF	PSD1MW1400...	C3S075V4...	31V-4D-0008
EY620EAV	PSD1MW1300...	C3S038V4...	31V-4D-0004
EY620EAR	PSD1MW1400...	C3S075V4...	31V-4D-0008
EY630EAR	PSD1MW1400...	C3S075V4...	31V-4D-0008
EY630EAN	PSD1MW1600...	C3S150V4...	31V-4D-0010
EY820EAR	PSD1MW1600...	C3S150V4...	31V-4D-0012
EY840EAK	PSD1MW1800...	C3S300V4...	31V-4E-0023
EY860EAJ	PSD1MW1800...	C3S300V4...	31V-4E-0023
With 60°C ambiant temperature - 400 VAC power supply			
EY310EAP	PSD1MW1300...	C3S015V4...	31V-4D-0004
EY310EAK	PSD1MW1300...	C3S038V4...	31V-4D-0004
EY420EAP	PSD1MW1300...	C3S038V4...	31V-4D-0004
EY420EAJ	PSD1MW1300...	C3S075V4...	31V-4D-0006
EY430EAL	PSD1MW1300...	C3S038V4...	31V-4D-0005
EY430EAF	PSD1MW1400...	C3S075V4...	31V-4D-0008
EY620EAV	PSD1MW1300...	C3S038V4...	31V-4D-0004
EY620EAR	PSD1MW1300...	C3S075V4...	31V-4D-0008
EY630EAR	PSD1MW1300...	C3S075V4...	31V-4D-0008
EY630EAN	PSD1MW1400...	C3S075V4...	31V-4D-0010
EY820EAR	PSD1MW1600...	C3S150V4...	31V-4D-0012
EY840EAK	PSD1MW1600...	C3S150V4...	31V-4E-0023
EY860EAJ	PSD1MW1800...	C3S300V4...	31V-4E-0023

(1) Ambient temperature for the drives is 40°C
[2]PSD drive with optional resolver board only

Dimensions

EY

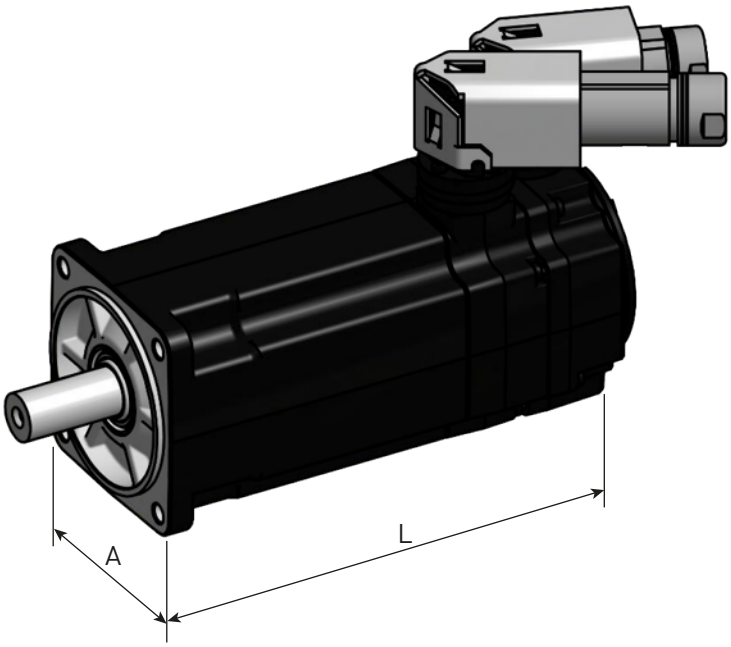

Motor	A	Mounting Flange centering / interaxis hole	Shaft diameter x length	Without Brake		With Brake	
	[mm]	[mm]	[mm]	L [mm]	Weight [kg]	L [mm]	Weight [kg]
EY310	71	60 / 75-80	11 x 23	159	2	207	2.4
EY420	91.5	80 / 100	19 x 40	181	3.7	232	4.5
EY430				206	4.6	257	5.4
EY620	121	110 / 130	24 x 50	195	6.9	249	8
EY630				224	8.8	278	10
EY820	155	130 / 165	32 x 58	213	13	279	16.5
EY840				273	20	339	23.5
EY860				333	27	399	30.5

Order Code

EY Motors

	1	2	3	4	5	6	7	8	9	10	11
Order example	**EY**	**3**	**10**	**E**	**A**	**K**	**B**	**7**	**1**	**10**	**-**

1	**Product Series**	
	EY	Atex servo motor Zone 2
2	**Motor size**	
	3	71 mm square
	4	92 mm square
	6	121 mm square
	8	155 mm square
3	**Motor length**	
	10	up to 60 depending on size
4	**Fixed code**	
	E	ATEX motor
5	**Feedback sensor**	
	A	2 pole resolver
	K	Without sensor
6	**Torque/Speed characteristics**	
		see table "Technical data"
	...	
7	**Painting**	
	B	Black RAL9005
8	**Electric connection**	
	7	Connector
9	**Brake and thermal sensor option***	
	PTC on power connector (AC890,AC30V,...)	
	1	PTC sensor
	4	PTC sensor + brake
	PTC on feedback connector (PSD,Compax3,SLVD,...)	
	A	PTC sensor
	D	PTC sensor + brake
10	**Mechanical interface**	
	10	IP65 with smooth shaft
	11	IP65 with keyed shaft
11	**Nameplate**	
	C	CCC certification
	-	ATEX

* other options on request

Cables

Motor cable

Drive	Cable reference	
	Current ⩽ 12 A @40°C Current ⩽ 9 A @60°C	Current ⩽ 24 A @40°C Current ⩽ 17 A @60°C
PSD1S, PSD1M18	CBM015HB-C04-D01-xxxx-00	CBM025HB-C04-D01-xxxx-00
PSD1M (except M18)	CBM015HB-C04-D02-xxxx-00	CBM025HB-C04-D02-xxxx-00
Compax3	CBM015HB-C04-D01-xxxx-00	CBM025HB-C04-D01-xxxx-00

Feedback cable (2 pole resolver)

Drive	Cable reference
PSD1	CBFRE0H0-C07-D03-xxxx-00
Compax3	CBFRE0H0-C07-D05-xxxx-00

For non-standard length cable with length different from:
3/5/10/15/20/25/30/50m please contact us.

EXPLOSION PROOF MOTOR FOR ZONE 1 - EX SERIES

Overview

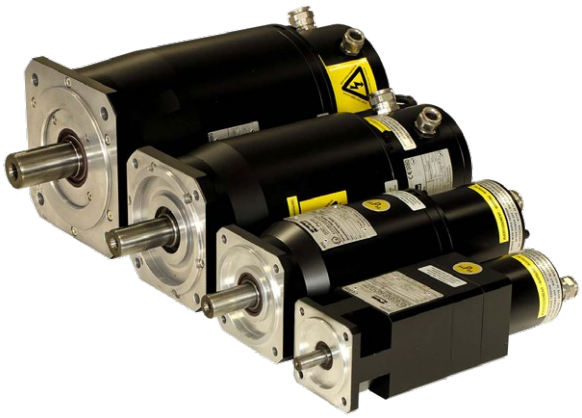

Description

EX series is a range of permanent magnet servo motor designed for use in zone 1 explosive atmospheres. Featuring robust explosion-proof housings, EX motors are capable of bearing internal explosions with no risks of propagation to the neighbouring environment. Two versions are available, conforming with North American or European safety standards. EX servomotors are characterized by excellent motion quality, great acceleration / deceleration capabilities, and high torque output over a wide speed range. Various winding variants and numerous options are available to offer maximum flexibility.

Advantages

- Servo motors with explosion proof enclosure "d"
- Conforming with CE/ATEX/CCC and IECEx
- For an ambiant temperature at 40°c or 60°C
- For gas and dust explosive atmospheres
- High precision
- High motion quality
- High dynamic performance
- Low cogging
- Compactness and robustness
- Maintenance free
- High power density (6 kW in a 155 square frame)
- Compatible with all popular drives

Applications

- Printing machinery
- Packaging, filling machines
- Painting robots
- Coating machines
- Chemical, petro-chemical and pharmaceutical industries
- Robot applications
- Special machines
- Cleaning applications
- Actuator for valve in Energy applications
- Waste processing plants

Technical Characteristics - Overview

Motor type	Permanent magnet synchronous motors
Number of poles	10
Torque range	1.6 ... 35 Nm
Speed range	1100...7600 min^{-1}
Operating temperature	Up to +40°C (standard) Up to +60°C (with derating)
Marking*	ATEX/IECEx, KOSHA
Voltage supply	230 / 400 VAC
Conformance*	ATEX 2014/34/EU Directive
	IEC/EN60079-0, IEC/EN60079-1 IEC/EN60079-31 standards
Classification	II 2GD Ex db IIB T4 Gb IP65 Ex tb IIIC T135 °C Db IP65 (Gas or Dust)
Ingress protection level	IP65
Connections	Cable glands

* For CCC please see page 6

EX Servo Motors - CE Marked for Explosive Atmospheres

Technical Data

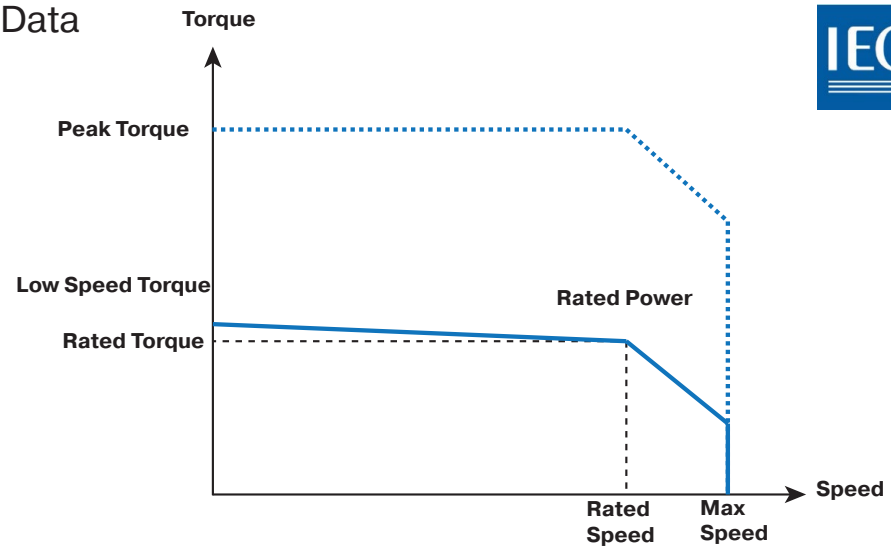

230 VAC power supply - single or three-phased

Motor	Rated Power Pn	Rated Torque Mn	Rated Speed Nn	Rated Current In	Low speed torque Mo	Low Speed Current Io	Peak Torque M peak	Peak Current I peak	Max. Speed N max
	[kW]	[Nm]	[rpm]	[Arms]	[Nm]	[Arms]	[Nm]	[Arms]	[rpm]
40°C ambient temperature									
EX310EAP	0.40	1.66	2300	1.2	1.75	1.2	4.2	3.1	2300
EX310EAK	0.64	1.54	4000	2.0	1.75	2.2	4.2	5.4	4000
EX420EAP	0.77	3.18	2300	2.3	3.5	2.5	8.3	6.2	2300
EX420EAJ	1.12	2.67	4000	3.3	3.5	4.3	8.3	10.7	4000
EX430EAL	1.02	4.2	2300	3.0	4.8	3.3	11.5	8.3	2300
EX430EAF	1.37	3.3	4000	4.1	4.8	5.8	11.5	14.5	4000
EX620EAV	0.76	6.6	1100	2.4	6.7	2.4	16.7	6.0	1100
EX620EAR	1.33	5.8	2200	4.0	6.7	4.5	16.7	11.2	2200
EX630EAR	1.43	9.4	1450	4.2	10.4	4.6	25.9	11.5	1450
EX630EAN	2.02	8.4	2300	5.7	10.4	6.9	25.9	17.3	2300
EX820EAR	2.57	11.2	2200	7.5	14	9.3	32.5	23.2	2200
EX840EAK	3.31	15.8	2000	9.4	24.5	14.3	58.2	35.6	2000
EX860EAJ	3.86	25.4	1450	11.5	35	15.7	83.3	39.2	1450
60°C ambient temperature									
EX310EAP	0.31	1.30	2300	0.9	1.5	1.2	4.2	3.1	2300
EX310EAK	0.40	0.95	4000	1.3	1.5	2.2	4.2	5.4	4000
EX420EAP	0.59	2.45	2300	1.8	3	2.1	7.3	5.3	2300
EX420EAJ	0.63	1.5	4000	1.9	3	3.7	7.3	9.1	4000
EX430EAL	0.82	3.4	2300	2.4	4.2	2.9	10.2	7.2	2300
EX430EAF	0.90	2.9	3000	3.6	4.2	5.1	10.2	12.7	4000
EX620EAV	0.63	5.5	1100	2.0	6	2.2	15.0	5.3	1100
EX620EAR	0.88	3.8	2200	2.8	6	4.1	15.0	9.9	2200
EX630EAR	1.12	7.35	1450	3.4	9	4.0	22.5	9.8	1450
EX630EAN	1.24	5.15	2300	3.7	9	6.1	22.5	14.7	2300
EX820EAR	1.65	8.5	1850	5.8	11	7.3	26.6	18.3	2200
EX840EAK	2.23	11.5	1850	6.9	21	12.2	51.0	30.6	2000
EX860EAJ	2.74	18.0	1450	8.3	31	13.9	75.1	34.8	1450

400 VAC power supply - single or three-phased

Motor	Rated Power Pn	Rated Torque Mn	Rated Speed Nn	Rated Current In	Low speed torque Mo	Low Speed Current Io	Peak Torque M peak	Peak Current I peak	Max. Speed N max
	[kW]	[Nm]	[rpm]	[Arms]	[Nm]	[Arms]	[Nm]	[Arms]	[rpm]
40°C ambient temperature									
EX310EAP	0.64	1.54	4000	1.1	1.75	1.2	4.2	3.1	4000
EX310EAK	0.87	1.23	6800	1.6	1.75	2.2	4.2	5.4	6800
EX420EAP	0.94	3	4000	2.1	3.5	2.5	8.3	6.2	3000
EX420EAJ	1.11	1.8	6000	2.3	3.5	4.3	8.3	10.7	6000
EX430EAL	1.37	3.3	4000	2.3	4.8	3.3	11.5	8.3	4000
EX430EAF	1.37	3.3	4000	4.1	4.8	5.8	11.5	14.5	5800
EX620EAV	1.25	6.0	2000	2.2	6.7	2.4	16.7	6.0	2000
EX620EAR	1.53	3.8	3900	2.7	6.7	4.5	16.7	11.2	3900
EX630EAR	2.19	7.8	2700	3.5	10.4	4.6	25.9	11.5	2700
EX630EAN	2.18	5.2	4000	3.8	10.4	6.9	25.9	17.3	4000
EX820EAR	2.84	7.5	3600	5.2	14	9.3	32.5	23.2	3900
EX840EAK	0.99	2.9	3300	2.1	24.5	14.3	58.2	35.6	3500
EX860EAJ	2.35	9.0	2500	4.4	35	15.7	83.3	39.2	2600
60°C ambient temperature									
EX310EAP	0.40	0.95	4000	0.7	1,5	1.2	4.2	3.1	4000
EX310EAK	0.40	0.95	4000	1.3	1,5	2.2	4.2	5.4	6800
EX420EAP	0.66	2.1	4000	1.5	3.0	2.1	7.3	5.3	3000
EX420EAJ	0.63	1.5	4000	1.9	3.0	3.7	7.3	9.1	6000
EX430EAL	0.90	2.9	3000	2.0	4.2	2.9	10.2	7.2	4000
EX430EAF	0.90	2.9	3000	3.6	4.2	5.1	10.2	12.7	4900
EX620EAV	0.88	4.2	2000	1.6	6.0	2.2	15.0	5.3	2000
EX620EAR	0.84	3.2	2500	2.4	6.0	4.1	15.0	9.9	3900
EX630EAR	1.18	4.5	2500	2.2	9.0	4.0	22.5	9.8	2700
EX630EAN	1.18	4.5	2500	3.3	9.0	6.1	22.5	14.7	4000
EX820EAR	1.65	8.5	1850	5.8	11.0	7.3	26.6	18.3	3900
EX840EAK	2.22	11.5	1850	6.9	21.0	12.2	51.0	30.6	2600
EX860EAJ	2.60	15.5	1600	7.2	31.0	13.9	75.1	34.8	2100

Drive Associations

230 VAC power supply

Motor	Associated Drive Sizes[1]	
	PSD1[2]	Compax3
With 40°C ambiant temperature - 230 VAC power supply		
EX310EAP	PSD1SW1200...	C3S025V2...
EX310EAK	PSD1SW1300...	C3S025V2...
EX420EAP	PSD1SW1300...	C3S025V2...
EX420EAJ	PSD1SW1300...	C3S063V2...
EX430EAL	PSD1SW1300...	C3S063V2...
EX430EAF	-	C3S063V2...
EX620EAV	PSD1SW1300...	C3S025V2...
EX620EAR	PSD1SW1300...	C3S063V2...
EX630EAR	PSD1SW1300...	C3S063V2...
EX630EAN	-	C3S100V2...
EX820EAR	-	C3S100V2...
EX840EAK	-	C3S150V2...
EX860EAJ	-	-
With 60°C ambiant temperature - 230 VAC power supply		
EX310EAP	PSD1SW1200...	C3S025V2...
EX310EAK	PSD1SW1300...	C3S025V2...
EX420EAP	PSD1SW1300...	C3S025V2...
EX420EAJ	PSD1SW1300...	C3S063V2...
EX430EAL	PSD1SW1300...	C3S063V2...
EX430EAF	-	C3S063V2...
EX620EAV	PSD1SW1300...	C3S025V2...
EX620EAR	PSD1SW1300...	C3S063V2...
EX630EAR	PSD1SW1300...	C3S063V2...
EX630EAN	-	C3S063V2...
EX820EAR	-	C3S100V2...
EX840EAK	-	C3S150V2...
EX860EAJ	-	C3S150V2...

[1] Ambient temperature for the drives is 40°C
[2] PSD drive with optional resolver board only

400 VAC power supply

Motor	Associated Drive Sizes[1]		
	PSD1[2]	Compax3	AC30V
With 40°C ambiant temperature - 400 VAC power supply			
EX310EAP	PSD1MW1300...	C3S015V4...	31V-4D-0004
EX310EAK	PSD1MW1300...	C3S038V4...	31V-4D-0004
EX420EAP	PSD1MW1300...	C3S038V4...	31V-4D-0004
EX420EAJ	PSD1MW1300...	C3S075V4...	31V-4D-0006
EX430EAL	PSD1MW1300...	C3S038V4...	31V-4D-0005
EX430EAF	PSD1MW1400...	C3S075V4...	31V-4D-0008
EX620EAV	PSD1MW1300...	C3S038V4...	31V-4D-0004
EX620EAR	PSD1MW1300...	C3S075V4...	31V-4D-0006
EX630EAR	PSD1MW1300...	C3S075V4...	31V-4D-0008
EX630EAN	PSD1MW1400...	C3S150V4...	31V-4D-0010
EX820EAR	PSD1MW1600...	C3S150V4...	31V-4D-0012
EX840EAK	PSD1MW1600...	C3S150V4...	31V-4E-0023
EX860EAJ	PSD1MW1800...	C3S300V4...	31V-4E-0023
With 60°C ambiant temperature - 400 VAC power supply			
EX310EAP	PSD1MW1300...	C3S015V4...	31V-4D-0004
EX310EAK	PSD1MW1300...	C3S038V4...	31V-4D-0004
EX420EAP	PSD1MW1300...	C3S038V4...	31V-4D-0004
EX420EAJ	PSD1MW1300...	C3S038V4...	31V-4D-0005
EX430EAL	PSD1MW1300...	C3S038V4...	31V-4D-0004
EX430EAF	PSD1MW1400...	C3S075V4...	31V-4D-0008
EX620EAV	PSD1MW1300...	C3S038V4...	31V-4D-0004
EX620EAR	PSD1MW1300...	C3S075V4...	31V-4D-0006
EX630EAR	PSD1MW1300...	C3S075V4...	31V-4D-0006
EX630EAN	PSD1MW1400...	C3S075V4...	31V-4D-0008
EX820EAR	PSD1MW1400...	C3S075V4...	31V-4D-0010
EX840EAK	PSD1MW1600...	C3S150V4...	31V-4E-0016
EX860EAJ	PSD1MW1600...	C3S150V4...	31V-4E-0023

[1] Ambient temperature for the drives is 40°C
[2] PSD drive with optional resolver board only

Dimensions (Resolver Version)

EX3

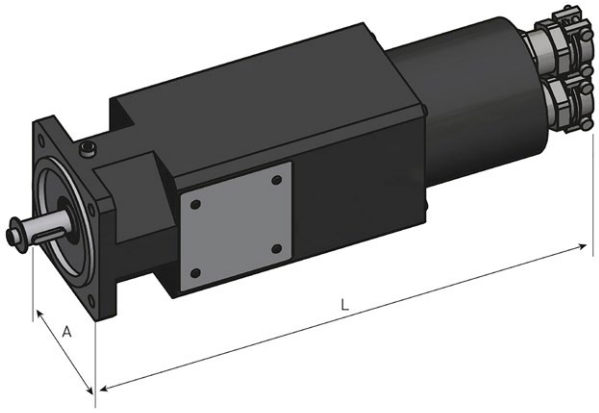

Motor	A	Mounting Flange centering / interaxis hole	Shaft diameter x length	Without Brake		With Brake	
	[mm]	[mm]	[mm]	L [mm]	Weight [kg]	L [mm]	Weight [kg]
EX310	70	60 / 75	11 x 23	225	2.8	255	3.2

EX4

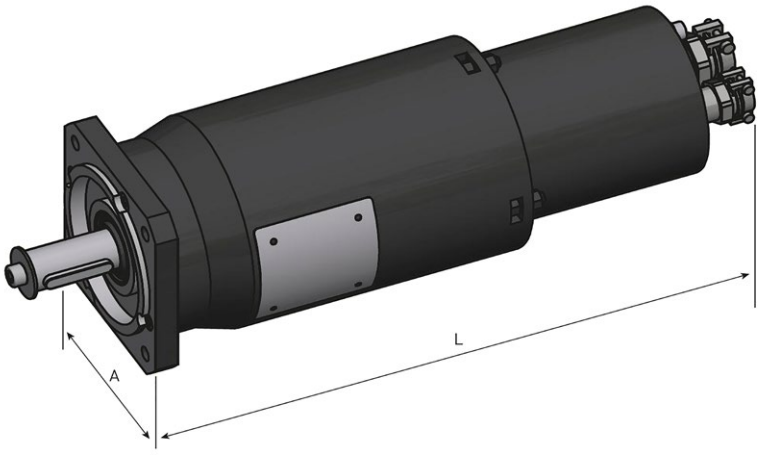

Motor	A	Mounting Flange centering / interaxis hole	Shaft diameter x length	Without Brake		With Brake	
	[mm]	[mm]	[mm]	L [mm]	Weight [kg]	L [mm]	Weight [kg]
EX420	92	80 / 100	19 x 40	305	7	330	8
EX430				330	8	355	9

EX6

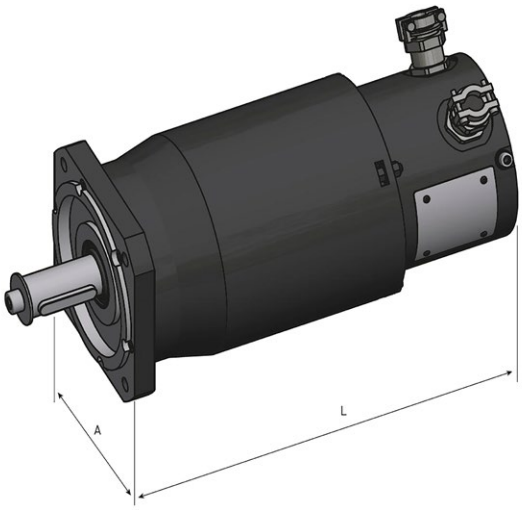

Motor	A	Mounting Flange centering / interaxis hole	Shaft diameter x length	Without Brake		With Brake	
	[mm]	[mm]	[mm]	L [mm]	Weight [kg]	L [mm]	Weight [kg]
EX620	120	110 / 130	24 x 50	275	10	290	11
EX630				300	12.5	325	13.5

EX8

Motor	A	Mounting Flange centering / interaxis hole	Shaft diameter x length	Without Brake		With Brake	
	[mm]	[mm]	[mm]	L [mm]	Weight [kg]	L [mm]	Weight [kg]
EX820	155	130 / 165	32 x 58	325	22	360	25
EX840				385	28	420	31
EX860				445	38	480	41

Order Code

EX Motors - CE Marked

	1	2	3	4	5	6	7	8	9	10	11	12
Order example	**EX**	**3**	**10**	**E**	**A**	**P**	**B**	**1**	**2**	**1**	**1**	**-**

1	**Product Series**	
	EX	Atex servo motor Zone 1
2	**Motor size**	
	3	70 mm square
	4	92 mm square
	6	120 mm square
	8	155 mm square
3	**Motor length**	
	10	up to 60 depending on size
4	**Fixed code**	
	E	ATEX/IECEx/KOSHA/CCC motor
5	**Feedback sensor**	
	A	2 pole resolver (standard)
	K	Without feedback sensor
	P	Absolute singleturn HIPERFACE DSL® EKS36 Encoder SIL2 - Not Kosha certified
	Q	Absolute multiturn HIPERFACE DSL® EKM36 Encoder SIL2 - Not Kosha certified
	R	Absolute singleturn HIPERFACE SKS36 Encoder (128 periods/rev)
	S	Absolute multiturn HIPERFACE SKM36 Encoder (128 periods/rev)
6	**Torque/Speed characteristics**	
		see table "Technical data"
	...	
7	**Painting**	
	B	Black RAL9005
8	**Electric connection**	
	1	Cable gland
9	**Brake**	
	2	Motor without brake (standard) + thermal switch sensor
	5	Motor with brake + thermal switch sensor
10	**Ingress protection level**	
	1	IP65
11	**Shaft end**	
	0	Smooth shaft (standard)
	1	Key shaft
12	**Nameplate**	
	-	ATEX/IECEx/KOSHA
	C	CCC certification

Cables

Power and feedback cables

Drive	Cable reference	
	Current ⩽ 17 A @40°C ambient t° Current ⩽ 12 A @60°C ambient t°	Current ⩽ 24 A @40°C ambient t° Current ⩽ 17 A @60°C ambient t°
Single cable - Power and Feedback - for use with Hiperface DSL® feedback		
PSD1S, PSD1M18	CBM015TD-T03-D01-xxxx-00	-
PSD1M (except M18)	CBM015TD-T03-D02-xxxx-00	-
Power Cable + 2 pairs (brake + thermoswitch) - for use with other feedback		
PSD1S / PSD1MW1800	CBM015TB-T04-D01-xxx-00	CBM025TB-T04-D01-xxx-00
PSD1M	CBM015TB-T04-D02-xxx-00	CBM025TB-T04-D02-xxx-00
Compax3	CBM015TB-T04-D01-xxx-00	CBM025TB-T04-D01-xxx-00
Feedback Cable	**2 pole resolver**	**Hiperface**
PSD1S / PSD1M	CBFRE0T0-T05-D03-xxxx-00	-
Compax3	CBFRE0T0-T05-D05-xxxx-00	CC3UR1D1Rxxxx

For non-standard length cable with length different from: 3/5/10/15/20/25/30/50m please contact us.

To note that these cables have a surface temperature resistance of 100°C.

Additional Information

Feedback Sensors

2 poles resolver - option A

- Accuracy: ±10' max
- Transformation ratio: 0.5 ±5 %
- Max. operating speed: 17 000 min^{-1}
- Working temperature range: -55...+155 °C

Single turn / Multiturn absolute encoder HIPERFACE SKS/SKM36 - option R/S

- Number of sine/cosine periods per revolution: 128
- Absolute position per revolution: 4096 (12 bits)
- Number of absolutely encodable revolutions: 4096 (SKM36)
- Max. operating speed SKS36: 12 000 min^{-1}
- Max. operating speed SKM36: 9000 min^{-1}
- Working temperature range: -20...+110 °C

Single turn / Multiturn absolute encoder HIPERFACE DSL® EKS/EKM36 - option P/Q

- Absolute position per revolution: 4096 (18/20 bits)
- Number of absolutely encodable revolutions: 4096 (EKM36)
- Max. operating speed EKS36: 12 000 min^{-1}
- Max. operating speed EKM36: 9000 min^{-1}
- Working temperature range: -20...+115 °C
- SIL2 certified

Shaft Loads

Maximum load acceptable on the shaft

The values written in the table are given for a load placed on the middle of the shaft like the picture below.

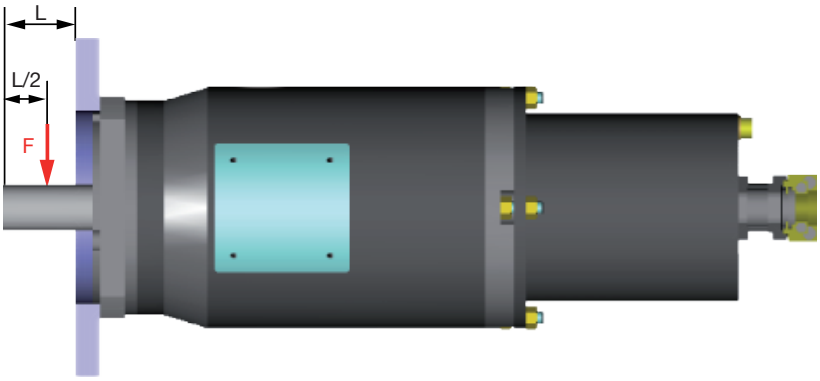

Due to the small ATEX airgap requirements between the shaft and the front flange, the radial loads on the shaft are lower than standard NX motors.
The ATEX airgap requirements depend on the volume of the motor and can lead to lower radial loads for bigger motors.

Regarding to these shaft loads, you must not use a pulley belt system without a load take-up system.

Type	Max. shaft load F [N]
EX310	100
EX430	500
EX630	500
EX860	250

ATEX GEARBOXES GXA SERIES

Overview

Description

GXA gearbox series has to be associated with the powerful Parker ATEX servomotors ranges for use in hazardous areas. The precision helical gearing design offers smooth and quiet operation for the most demanding high performance applications.
The solid uncaged needle roller bearings provides maximum contact points to increase stiffness and generates high output torque.
In addition the unique motor adapter and bushing module system design allows to obtain a compact structure and a quick and easy mounting of any ATEX certified Parker motor.

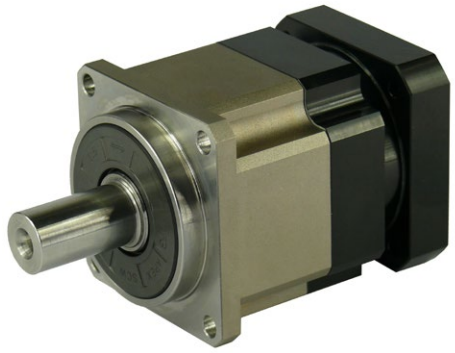

Features

- ATEX certify
- Low backlash
- High efficiency
- Easy mounting
- Low noise
- Compact structure
- Helical Gear Design

Technical Characteristics - Overview

Series	Unit	GXA
Gear geometry		Helical Gearing
Type		In-Line
Frame sizes	[mm]	60, 90, 115, 142, 180, 220
Maximum input speed	[min^{-1}]	up to 10 000
Nominal torque	[Nm]	40...1800
Radial force	[N]	up to 50 000
Life	[h]	up to 20 000
Backlash	[arc-min]	up to ⩽ 3
Efficiency	[%]	up to ⩾ 97 %
Conformance		2014/34/EU Directive
Classification		II 2 GD c T6
Harmonized standard		EN 1127-1:2012
Other technical standards & specifications applied		EN 13463-1:2009, EN 13463-5:2013, ISO281:2004, ISO286:2013, DIN3960

Technical Characteristics

Model No.		Stage	Ratio[1]	GX.. R02..	GX.. R04..	GX.. R06..	GX.. R07..	GX.. R09..	GX.. R10..
Nominal Output Torque T_{2N}	[Nm]	1	3	55	130	208	342	588	-
			4	50	140	290	542	1050	-
			5	60	160	330	650	1200	-
			6	55	150	310	600	1100	-
			7	50	140	300	550	1100	-
			8	45	120	260	500	1000	-
			9	40	100	230	450	900	-
			10	40	100	230	450	900	-
		2	15	-	130	208	342	588	-
			20	-	140	290	542	1050	-
			25	-	160	330	650	1200	-
			30	-	150	310	600	1100	-
			35	-	140	300	550	1100	-
			40	-	120	260	500	1000	-
			45	-	100	230	450	900	-
			50	-	160	330	650	1200	-
			60	-	150	310	600	1100	-
			70	-	140	300	550	1100	1800
			80	-	120	260	500	1000	1600
			90	-	100	230	450	900	1500
			100	-	100	230	450	900	1500
Emergency Stop Torque T_{2NOT}[3]	[Nm]	1,2	3~100	3 times of Nominal Output Torque					
Nominal Input Speed n_{1N}	[min^{-1}]	1,2	3~100	5000	4000	4000	3000	3000	2000
Max. Input Speed n_{1B}	[min^{-1}]	1,2	3~100	10 000	8000	8000	6000	6000	4000
Standard Backlash	[arcmin]	1	3~10	⩽ 5	⩽ 5	⩽ 5	⩽ 5	⩽ 5	⩽ 5
		2	15~100	⩽ 7	⩽ 7	⩽ 7	⩽ 7	⩽ 7	⩽ 7
Reduced Backlash	[arcmin]	1	3~10	⩽ 3	⩽ 3	⩽ 3	⩽ 3	⩽ 3	⩽ 3
		2	15~100	⩽ 5	⩽ 5	⩽ 5	⩽ 5	⩽ 5	⩽ 5
Torsional Rigidity	[Nm / arcmin]	1,2	3~100	7	14	25	50	145	225
Max. Radial Load F_{2rB}[2]	[N]	1,2	3~100	1530	3250	6700	9400	14500	50000
Max. Axial Load F_{2aB}[2]	[N]	1,2	3~100	765	1625	3350	4700	7250	25000
Lifetime	[h]	1,2	3~100	20 000*					
Efficiency	[%]	1	3~10	⩾ 97 %					
		2	15~100	⩾ 94 %					
Weight	[kg]	1	3~10	1.3	3.7	7.8	14.5	29	48
		2	15~100	1.5	4.1	9	17.5	33	60
Operating Temp	[°C]	1,2	3~100	-10 to 40 °C					
Lubrication				Synthetic grease					
Degree of Gearbox Protection		1,2	3~100	IP65					
Mounting Position		1,2	3~100	All directions					
Noise Level (n1=3000 min^{-1}, No Load)	[dB(A)]	1,2	3~100	⩽ 58	⩽ 60	⩽ 63	⩽ 65	⩽ 67	⩽ 70

1. Ratio (i=N in / N out)
2. Applied to the output shaft center @ 100 min-1
3. Max. acceleration torque T2B = 60% of T2NOT
* S1 service life 10,000 hrs.

Gearbox Inertia

Model No.	Unit	Stage	Ratio	GX.. R02..	GX.. R04..	GX.. R06..	GX.. R07..	GX.. R09..	GX.. R10..
Mass Moments of inertia J_1	[kgmm²]	1	3	16	61	325	921	2898	-
			4	14	48	274	754	2367	-
			5	13	47	271	742	2329	-
			6	13	45	265	725	2275	-
			7	13	45	262	714	2248	-
			8	13	44	258	707	2259	-
			9	13	44	257	704	2253	-
			10	13	44	257	703	2251	-
		2	15	-	13	47	271	742	-
			20	-	13	47	271	742	-
			25	-	13	47	271	742	-
			30	-	13	47	271	742	-
			35	-	13	47	271	742	-
			40	-	13	47	271	742	-
			45	-	13	47	271	742	-
			50	-	13	44	257	703	-
			60	-	13	44	257	703	-
			70	-	13	44	257	703	2251
			80	-	13	44	257	703	2251
			90	-	13	44	257	703	2251
			100	-	13	44	257	703	2251

Permitted radial and axial loads on output shaft of the gearbox

The permitted radial and axial loads on output shaft of the gearbox depend on the design of the gearbox supporting bearings.
GXA Series uses the extension straddle oversized ball bearing design It can take heavy load from both axes.

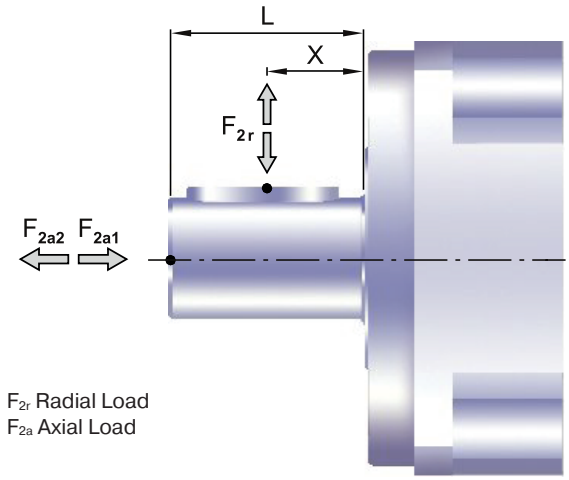

If radial force F2r exert on the center of the output shaft : X=1/2 x L.

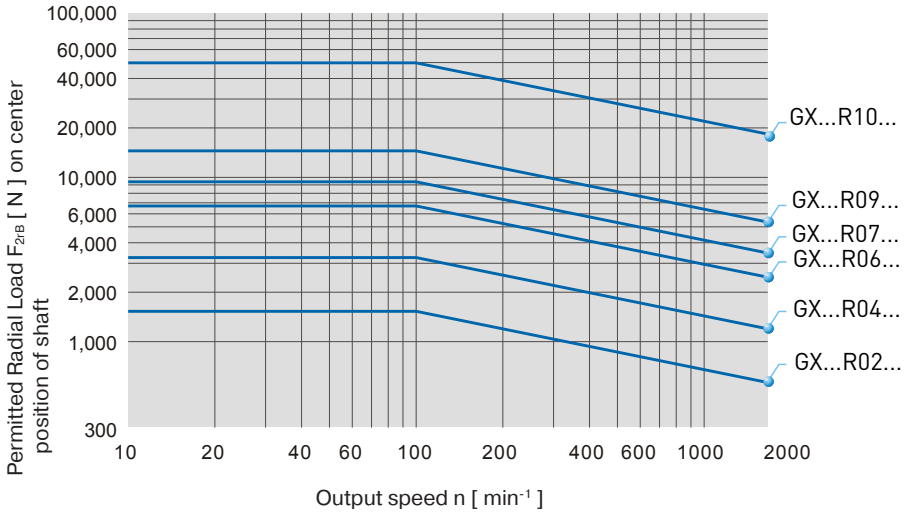

The permitted radial load is given on left diagram.

If radial force F2r not exert on the center of the output shaft : X<1/2 x L or X>1/2 x L

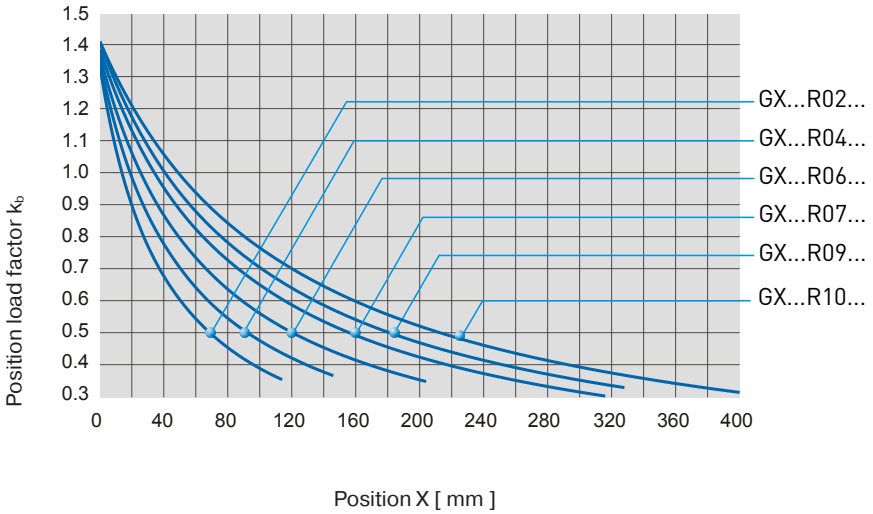

The permitted radial load can be calculated by multiplying the previous value by the position load factor Kb on the left diagram.

Dimensions

1 Stage - Ratio i = 3 - 10

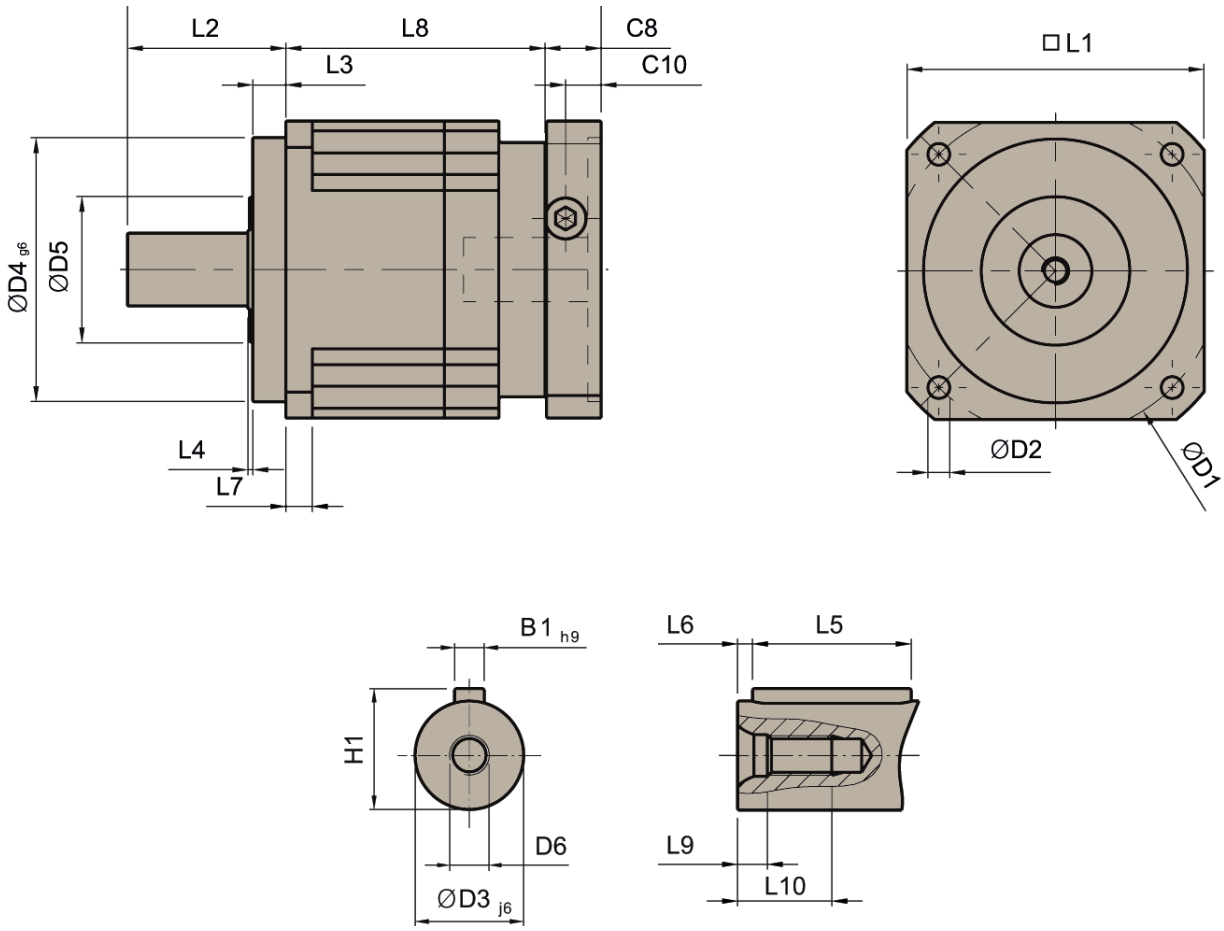

	GX..R02..	GX..R04..	GX..R06..	GX..R07..	GX..R09..
D1	70	100	130	165	215
D2	5.5	6.6	9	11	13
D3 j6	16	22	32	40	55
D4 g6	50	80	110	130	160
D5	45	65	95	75	95
D6	M5 x 0.8	M8 x 1.25	M12 x 1.75	M16 x 0.8	M20 x 2.5
L1	60	90	115	142	180
L2	37	48	65	97	105
L3	7	10	12	15	20
L4	1.5	1.5	2	3	3
L5	25	32	40	63	70
L6	2	3	5	5	6
L7	6	8	10	12	15
L8	61	78.5	102	119.5	154
L9	4.8	7.2	10	12	15
L10	12.5	19	28	36	42
C8 [3]	19	17	19.5	22.5	29
C10 [3]	13.5	10.75	13	15	20.75
B1 h9	5	6	10	12	16
H1	18	24.5	35	43	59

"3. C8~C10 are motor specific dimensions.

2 Stages - Ratio i = 15 - 100

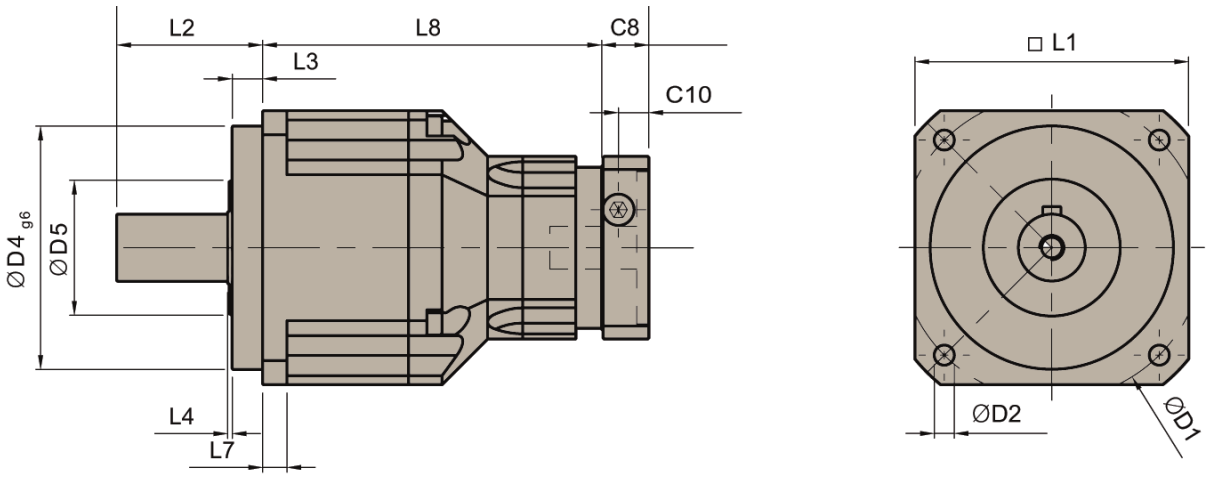

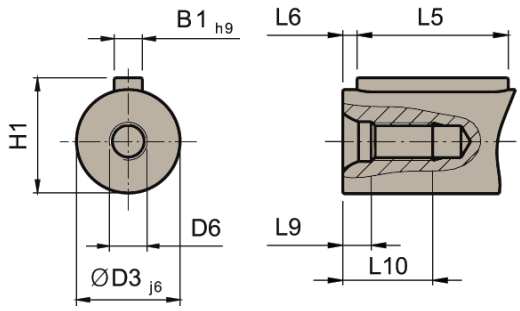

	GX..R04..	GX..R06..	GX..R07..	GX..R09..	GX..R10..
D1	100	130	165	215	250
D2	6.6	9	11	13	17
D3 j6	22	32	40	55	75
D4 g6	80	110	130	160	180
D5	65	95	75	95	115
D6	M8 x 1.25	M12 x 1.75	M16 x 2	M20 x 2.5	M20 x 2.5
L1	90	115	142	180	220
L2	48	65	97	105	138
L3	10	12	15	20	30
L4	1.5	2	3	3	3
L5	32	40	63	70	90
L6	3	5	5	6	7
L7	8	10	12	15	20
L8	111.5	143.5	176	209.5	248
L9	7.2	10	12	15	15
L10	19	28	36	42	42
C8 [4]	19	17	19.5	22.5	29
C10 [4]	13.5	10.75	13	15	20.75
B1 h9	6	10	12	16	20
H1	24.5	35	43	59	79.5

4. C8~C10 are motor specific dimensions.

Gearbox Combinations

	Ratio	Motor Size			
		EX3 / EY3	EX4 / EY4	EX6 / EY6	EX8 / EY8
1 stage	3	GXA3N003R0201	GXA4N003R0401	GXA6N003R0601	GXA8N003R0701
	4	GXA3N004R0201	GXA4N004R0401	GXA6N004R0601	GXA8N004R0701
	5	GXA3N005R0201	GXA4N005R0401	GXA6N005R0601	GXA8N005R0701
	6	GXA3N006R0201	GXA4N006R0401	GXA6N006R0601	GXA8N006R0701
	7	GXA3N007R0201	GXA4N007R0401	GXA6N007R0601	GXA8N007R0701
	8	GXA3N008R0201	GXA4N008R0401	GXA6N008R0601	GXA8N008R0701
	9	GXA3N009R0201	GXA4N009R0401	GXA6N009R0601	GXA8N009R0701
	10	GXA3N010R0201	GXA4N010R0401	GXA6N010R0601	GXA8N010R0701
2 stages	15	GXA3N015R0401	GXA4N015R0601	GXA6N015R0701	GXA8N015R0901
	20	GXA3N020R0401	GXA4N020R0601	GXA6N020R0701	GXA8N020R0901
	25	GXA3N025R0401	GXA4N025R0601	GXA6N025R0701	GXA8N025R0901
	30	GXA3N030R0401	GXA4N030R0601	GXA6N030R0701	GXA8N030R0901
	35	GXA3N035R0401	GXA4N035R0601	GXA6N035R0701	GXA8N035R0901
	40	GXA3N040R0401	GXA4N040R0601	GXA6N040R0701	GXA8N040R0901
	45	GXA3N045R0401	GXA4N045R0601	GXA6N045R0701	GXA8N045R0901
	50	GXA3N050R0401	GXA4N050R0601	GXA6N050R0701	GXA8N050R0901
	60	GXA3N060R0401	GXA4N060R0601	GXA6N060R0701	GXA8N060R0901
	70		GXA4N070R0601		GXA8N070R0901
		GXA3N070R0401	GXA4N070R0701	GXA6N070R0701	GXA8N070R1001
	80	GXA3N080R0401	GXA4N080R0601	GXA6N080R0701	GXA8N080R0901
			GXA4N080R0701		GXA8N080R1001
	90	GXA3N090R0401	GXA4N090R0601	GXA6N090R0701	GXA8N090R0901
			GXA4N090R0701		GXA8N090R1001
	100	GXA3N100R0401	GXA4N100R0601	GXA6N100R0701	
			GXA4N100R0701		GXA8N100R1001

Motor gearhead possible combination with torque limitation, please consult us at EM-motion@parker.com

Order Code

GXA Gearboxes

	1	2	3	4	5	6	7
Order example	**GX**	**A**	**3**	**N**	**005**	**R060**	**0**

1	**Gearbox Series**		
	GX	Gearbox for in-line mounting	
2	**Gearbox Type**		
	A	ATEX version	
3	**Motor size association ***		
	3	EX3, EY3 (60/75/11/23)	
	4	EX4, EY4 (80/100/19/40)	
	6	EX6, EY6 (110/130/24/50)	
	8	EX8, EY8 (130/165/32/58)	
4	**Backlash**		
	N	Normal	
	R	Reduced	
5	**Ratio**		
	3 to 10	for GXA	1 stage
	15 to 100	for GXA	2 stages
6	**Gearbox Size ***		
	R020	Size 60	
	R040	Size 90	
	R060	Size 115	
	R070	Size 142	
	R090	Size 180	
	R100	Size 220	
7	**Shaft**		
	0	Smooth shaft	
	1	Keyed shaft	

* To find out about possible combinations please refer to the table on page 34.